Large Blade Testing Facility Update

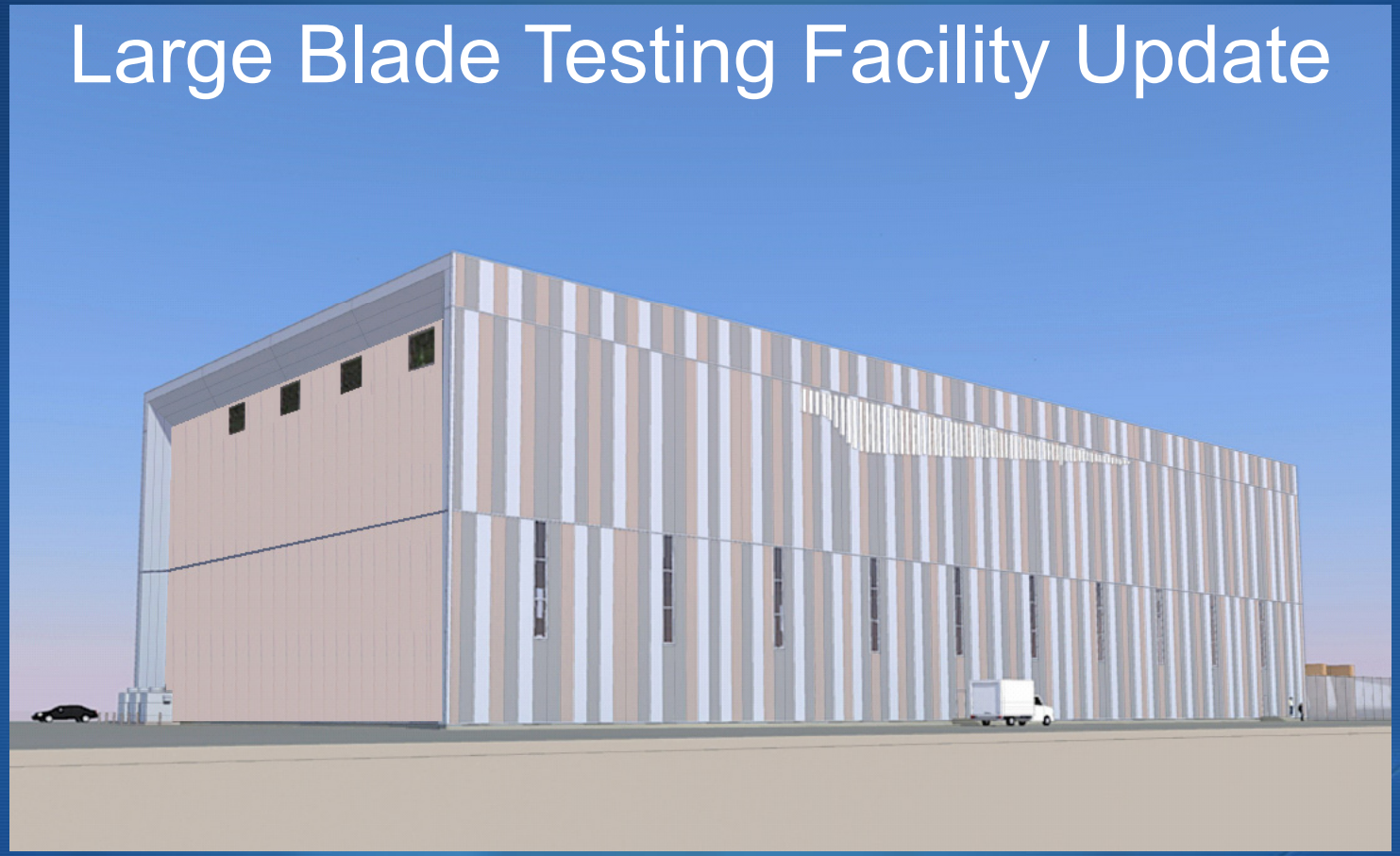

Rahul Yarala
Executive Director, Wind Technology Testing Center
July 20, 2010

MASSACHUSETTS CLEAN ENERGY CENTER

Massachusetts It's all here.®

Wind Turbine Blade Testing

- Static strength testing and accelerated fatigue testing of wind turbine blades are required for
  - Turbine certification
  - Reduce the risk of widespread failures
  - Improve blade reliability
  - Reduce COE
- Blades over 50m can not be fatigue tested in the United States
- Blades 62m long are in production and longer blades are being designed
- This project will reduce COE by
  - Reducing frequency of blade failures
  - Lowering machine cost
  - Introducing more efficient blades
  - Reducing technical and financial risk of large-scale deployment
  - Providing industry with low cost test facilities to comply with certification requirements and support value engineering

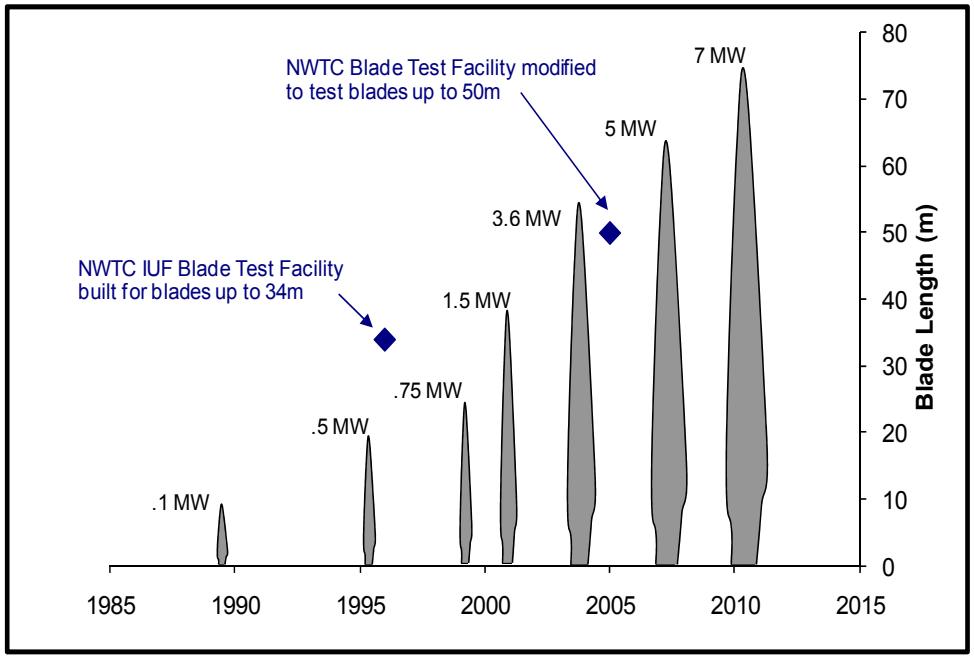

Slide courtesy of Jason Cotrell of NREL

CLEAN ENERGY CENTER

Construction Status

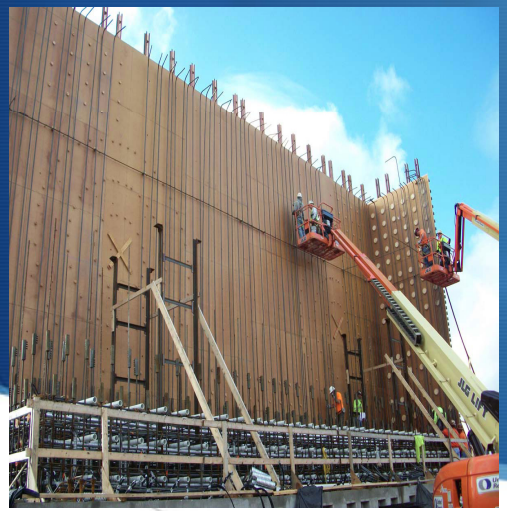

- Foundation completed
- Concrete Test stands completed
- Steel Erection started and on target to complete by August 2010
- Building enclosure to be completed by Oct/Nov 2010.
- Substantial completion by February/March 2011

MASSACHUSETTS CLEAN ENERGY CENTER

ARRA at Work!

Massachusetts It's all here.®

Static Testing

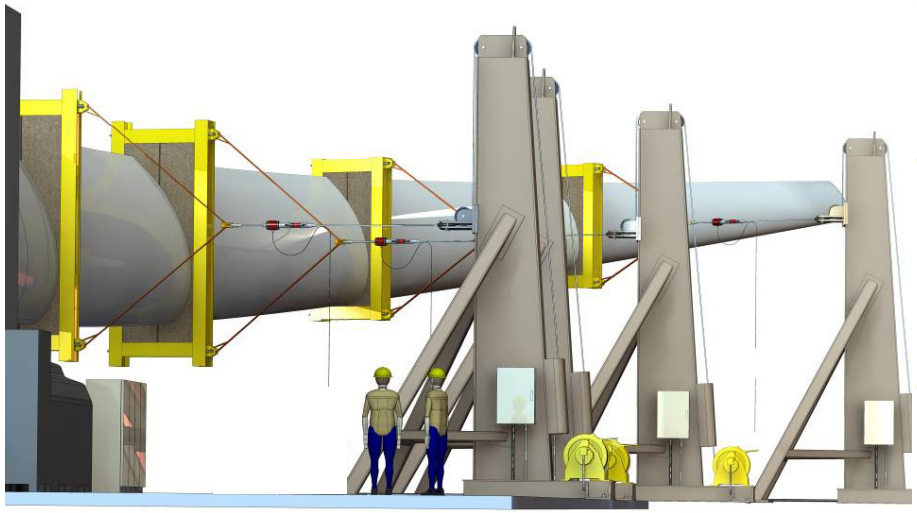

- Vertical and horizontal static test capability
- 8-station computer controlled hydraulic winches and cylinders - precise simultaneous loading
- Test configured to run on any of the three test stands – flexible test scheduling

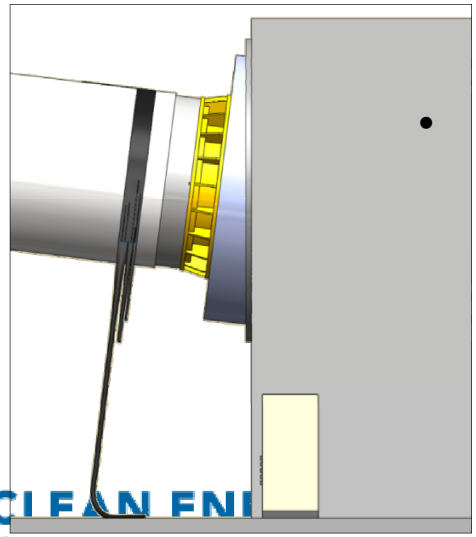

- Mounting angle adjustable 0-12 degrees with wedge plates

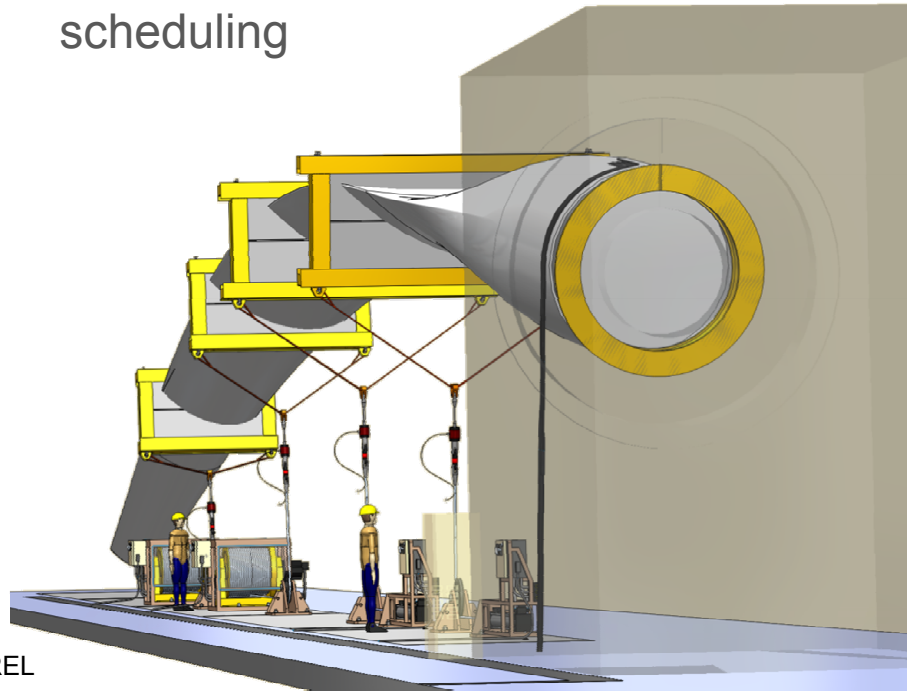

Images courtesy of MTS and NREL

Single-Axis Resonant Fatigue

- Reduced energy use and accelerated test time vs. forced actuation
- Small force introduction to the blade
- Adjustable bending moment curve
- Servo-hydraulic resonant fatigue testing implemented using UREX system developed jointly by NREL and MTS

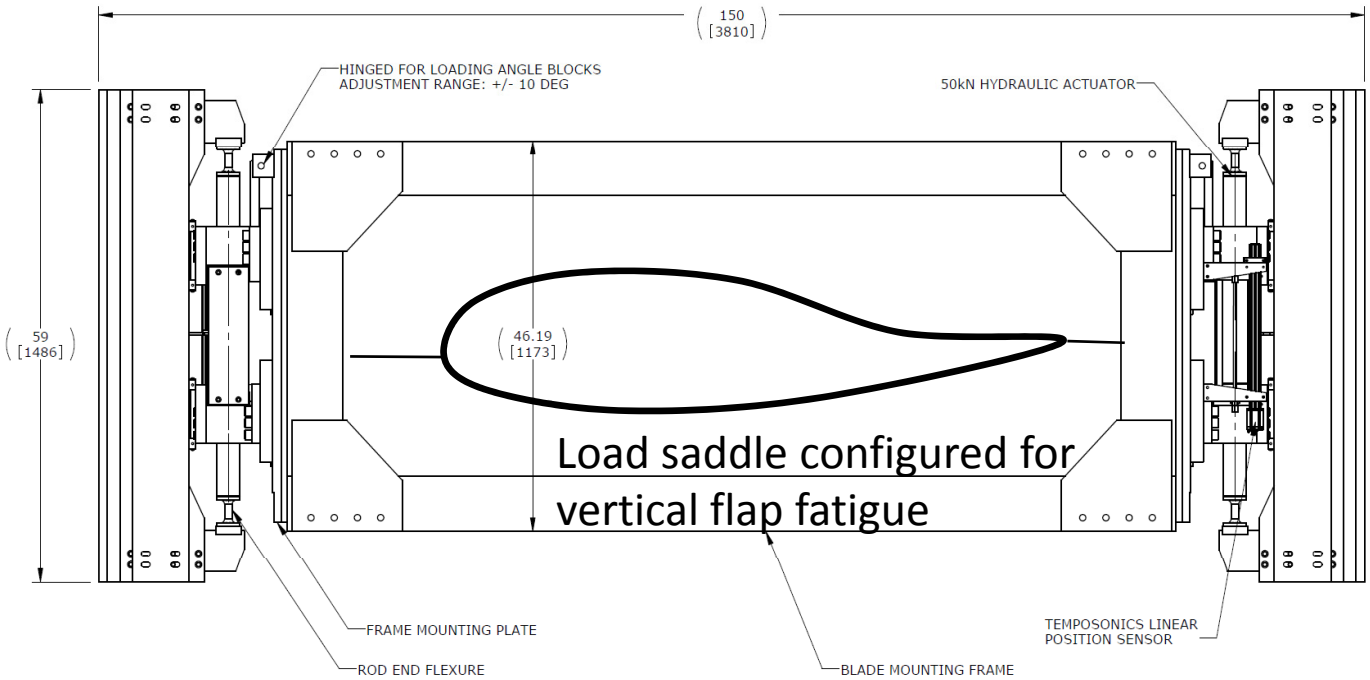

Image courtesy of MTS and NREL

Fatigue Testing

- Horizontal or vertical excitation selectable for large turbine blades (loading R-ratio choice)
- Advanced data acquisition and automated test monitoring

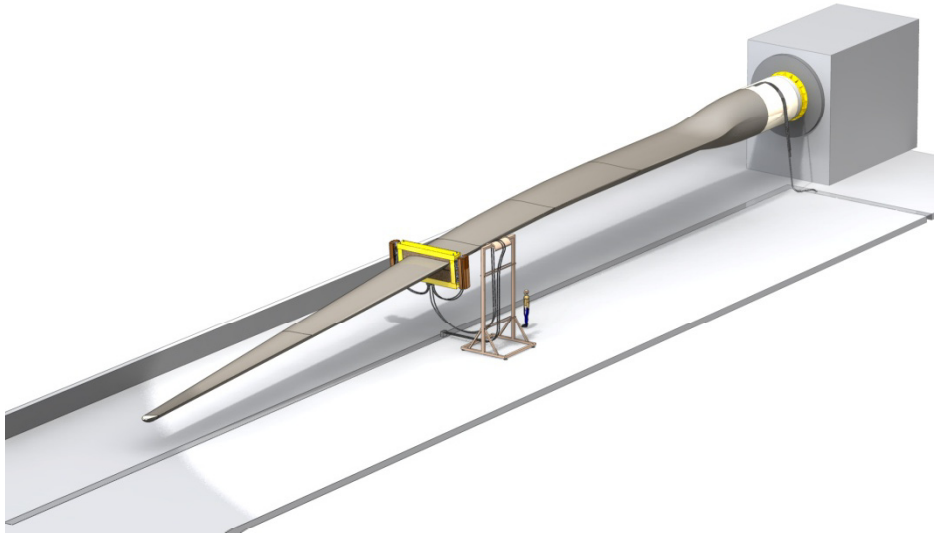

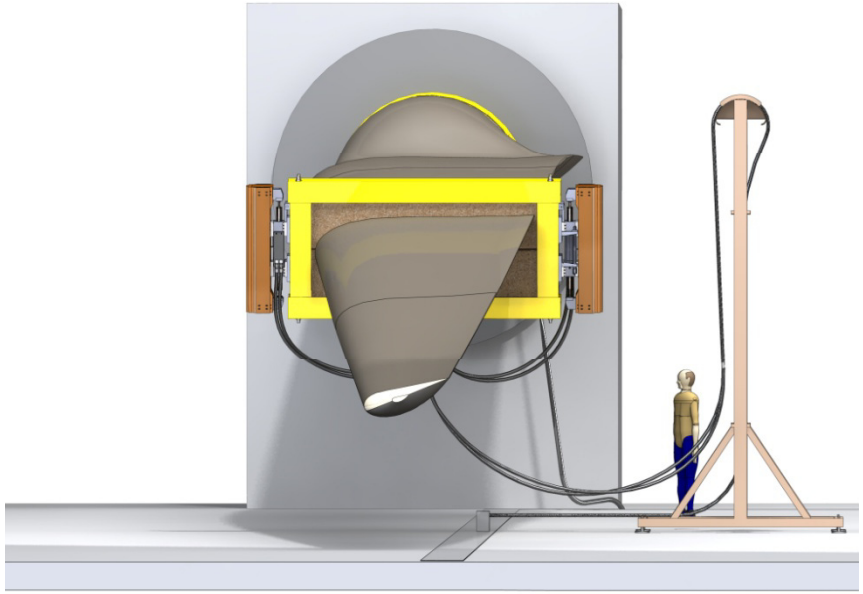

CLEAN ENERGY CENTER

Images courtesy of MTS and NREL

Dual Axis Fatigue Testing

- Plan to develop and provide full-scale biaxial resonant fatigue testing capability for large 40 to 70+ m turbine blades
- Further development/implementation for commercial testing
- Benefits:
  - More realistic loading of the blade
  - Reduced testing time for equivalent number of cycles

Experimental biaxial testing using UREX prototypes on a 9 m turbine blade
Photo courtesy of NREL-NWTC

CLEAN ENERGY CENTER

Specifications

Load Capacity	Maximum static bending moment 84-mega Newton meter (MNm)
Blade Length	Up to 90-meter blades depending on test details and specifications
Blade Displacement	32-meter maximum horizontal tip displacement 21-meter maximum vertical tip displacement
Mounting Plates	5-meter diameter with center to center distance of 12 meters
Overhead Cranes	Two independent 50-ton bridge cranes – 100 ton total capacity
Blade Mounting Heights	6.5 meters from floor to blade route center for test stands 1 and 2 5 meters for test stand 3
Static Testing	84-MNm max static root bending moment Test to ultimate failure Up to 8 hydraulic/electrical winches Bending moment tracking Strain distribution Stiffness calibration
Dynamic Testing	NREL's patented resonant test system technology 24-hour fully monitored fatigue testing 21-meter tip-to-tip fatigue test tip displacement

**Information subject to change as design details evolve*

CLEAN ENERGY CENTER

Massachusetts It's all here.®

Interior Views

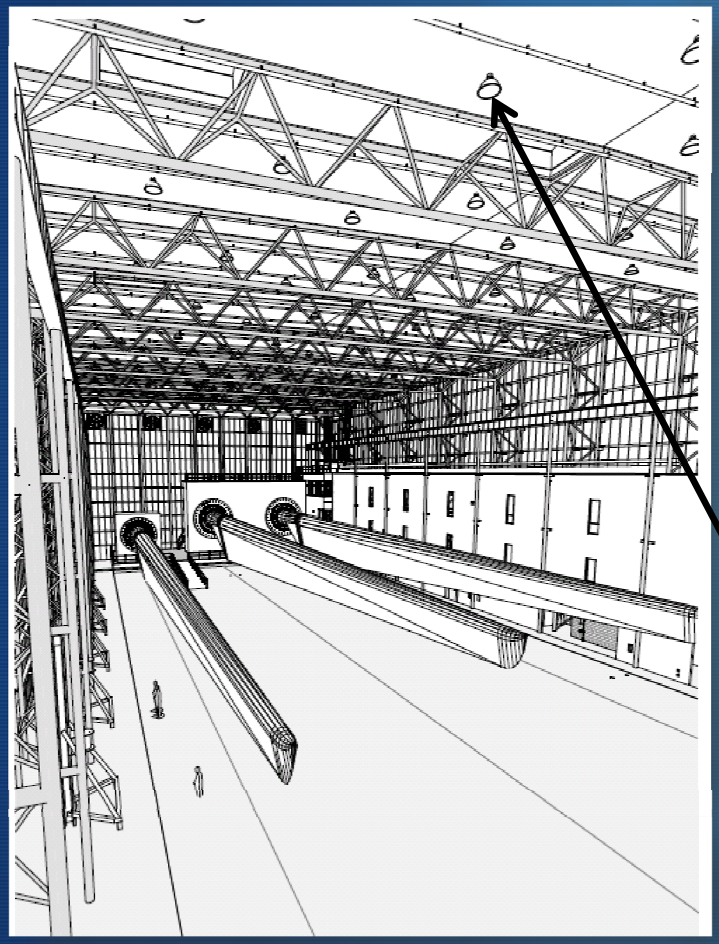

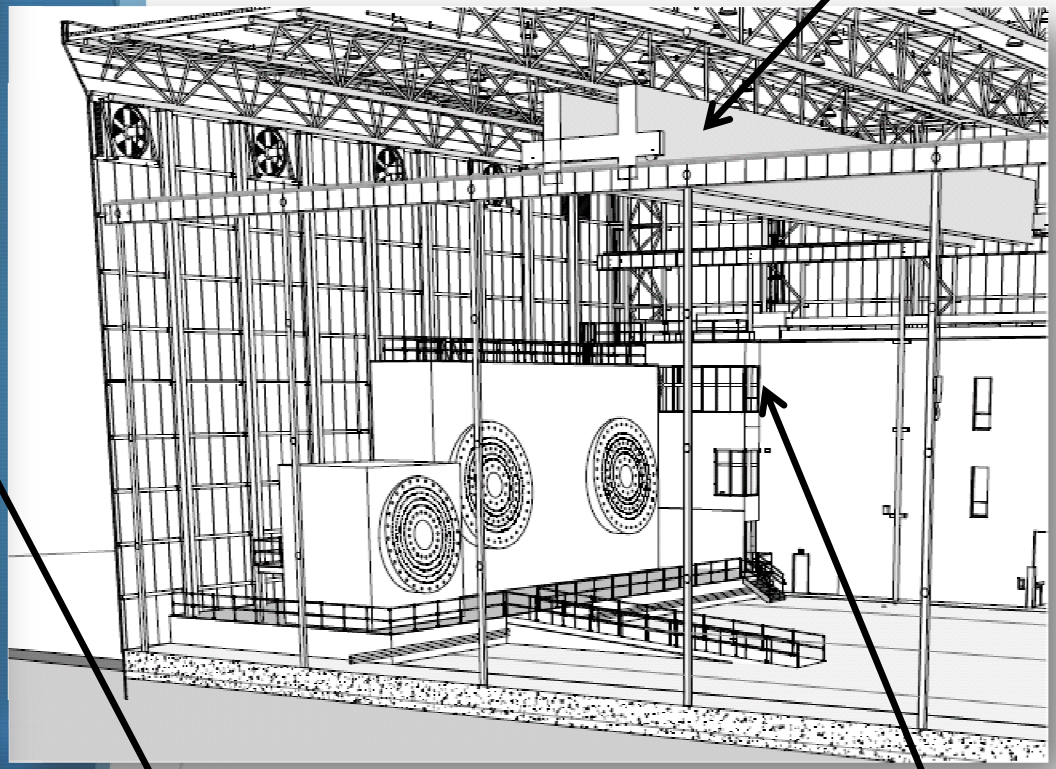

Energy Efficient LED Task lighting

CLEAN ENERGY CENTER

Mounting Details

4 Bolt Circles

2.5m Diameter
3.0m Diameter
4.0m Diameter
4.5m Diameter

1.22m Access Hole

Thread Size:
Up to M48

Blade Root Moments:
Up to 84 MN-m (about 90m blade)

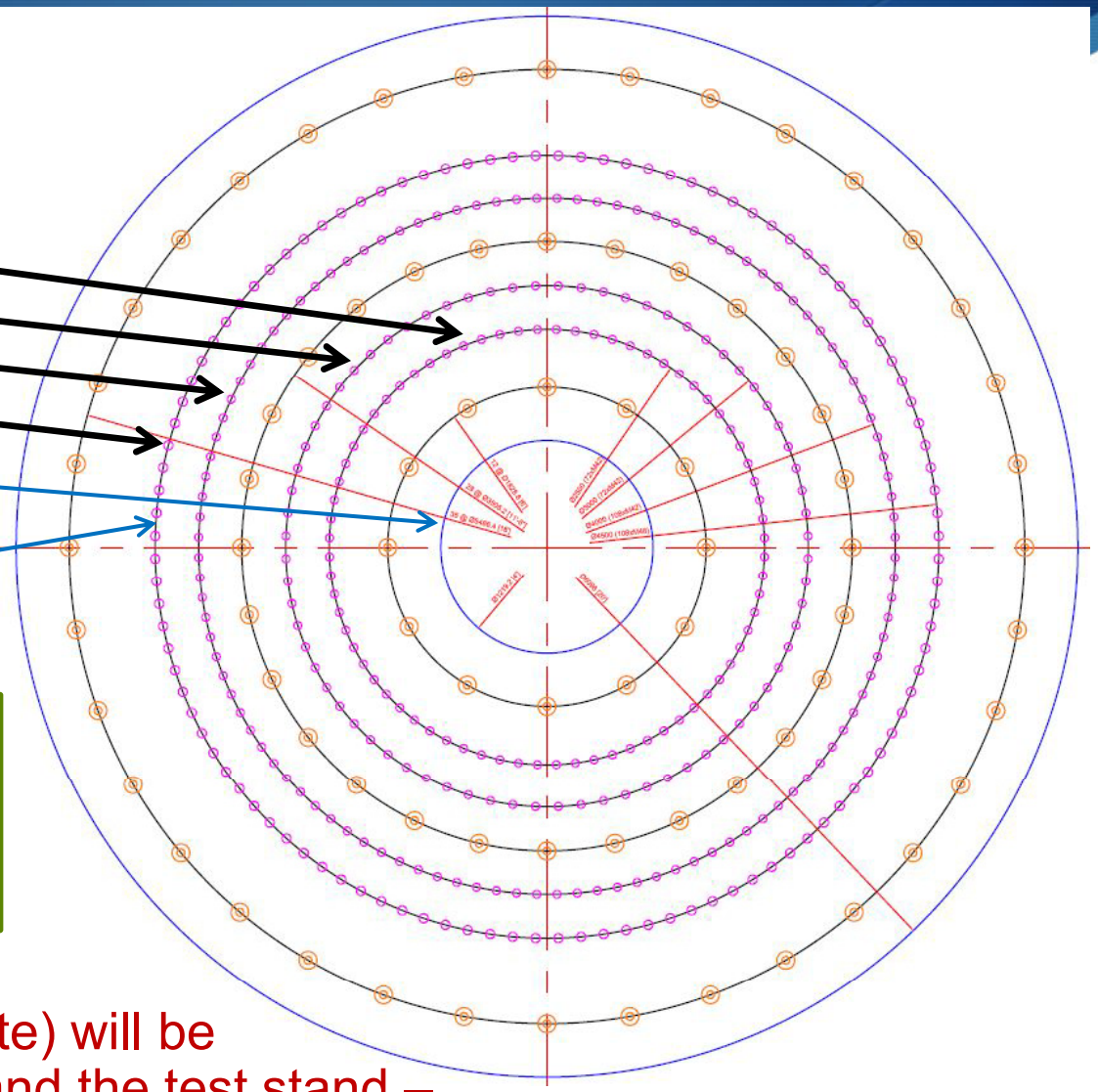

An adapter plate (or wedge plate) will be positioned between the blade and the test stand – This will adapt all bolt patterns to the face plate and provide required blade angle for testing

MASSACHUSETTS CLEAN ENERGY CENTER

Massachusetts It's all here.®

Next Steps

- Complete facility construction and commissioning in Q1 2011

- Build and commission blade testing hardware
  - UREX Fatigue Test System
  - Static Test System
  - Data Acquisition System

- Support R&D activities & new technology development of Rotor Assembly

- Build domestic and international customer base

- Support development of offshore wind manufacturing and deployment in the U.S.

- Establish laboratory accreditation

CLEAN ENERGY CENTER

Massachusetts It's all here.®