Gearbox Failure Data Base

Sandy Butterfield
Chief Engineer
June 18, 2009

National Wind Technology Center

Gearbox Failure Database

Why do we need a failure data base?

- Unambiguous failure data will focus research accurately.
- Objective record of improvements
- Aid in root cause analysis

What is crucial for data base credibility?

- Inspection training for consistent and accurate data entry
- Data input software to aid inspection, data consolidation, consistent terminology and consistent interpretation
- Broad range of data sources and operating conditions

Participation of Contributors

- Failure data
  - Operator must document basic information (rating, capacity factor, run time, high/low turbulence location, lubrication analysis history, etc)
  - Rebuild shop must report details of internal conditions of box (configuration, gear condition, bearing condition, photos, nature/classification of failure, etc)
  - Historical data has value as well, even if incomplete
  - Supply failed components for metallurgical analysis on selected pieces
- Sign NDA

Data Base Plan

- Define data requirements
- Training participants and their gearbox maintenance shops
- Deploying data base tool to shops
- Collecting data and failed components
- Update participants as results become available
  - Periodic workshops
  - Periodic reports
- Special analysis topics welcome from participants

Data Sources

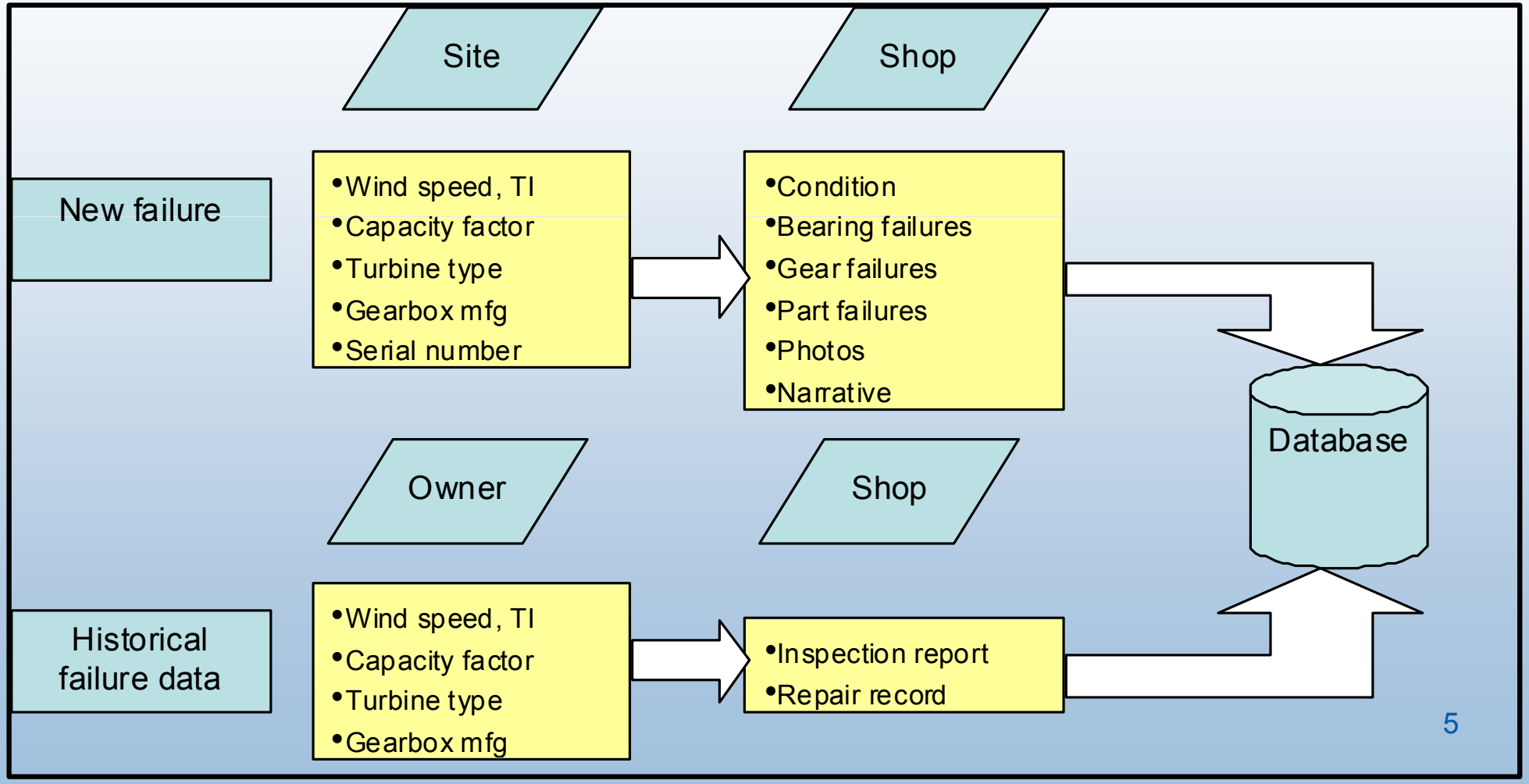

Gearbox Configuration Stick Figure

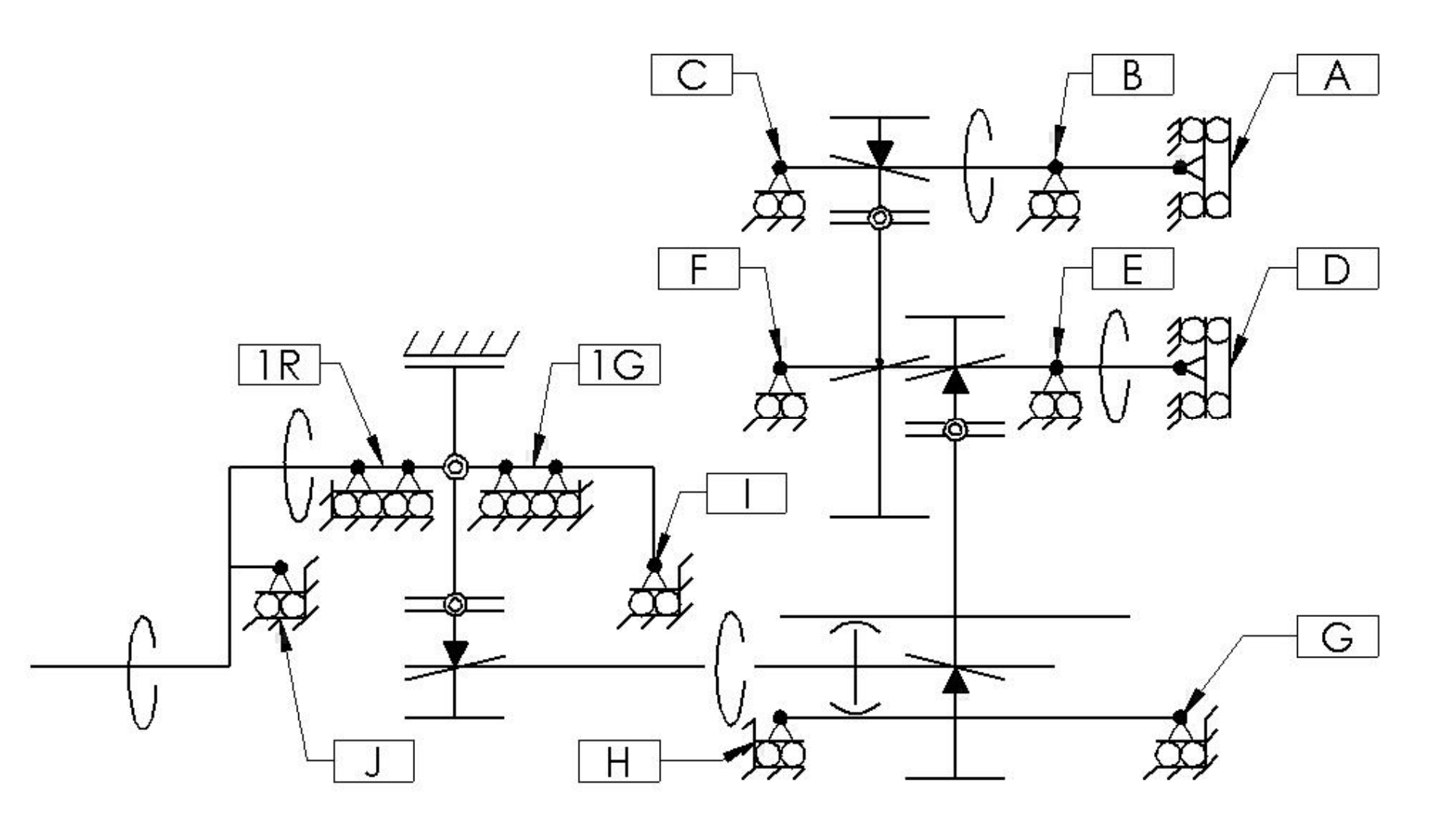

Selected Metallurgical Analyses

- Metallurgy – possible source of some failures
- NREL - inventory failed bearings
- NREL - partner with Oak Ridge National Laboratory to select hardware for further examination at their lab.
- ORNL - reports for failure data base

Example of what used to be a spherical roller bearing – supplied by EMS for database and metallurgical analysis

Reference Pictorial Failure Atlas

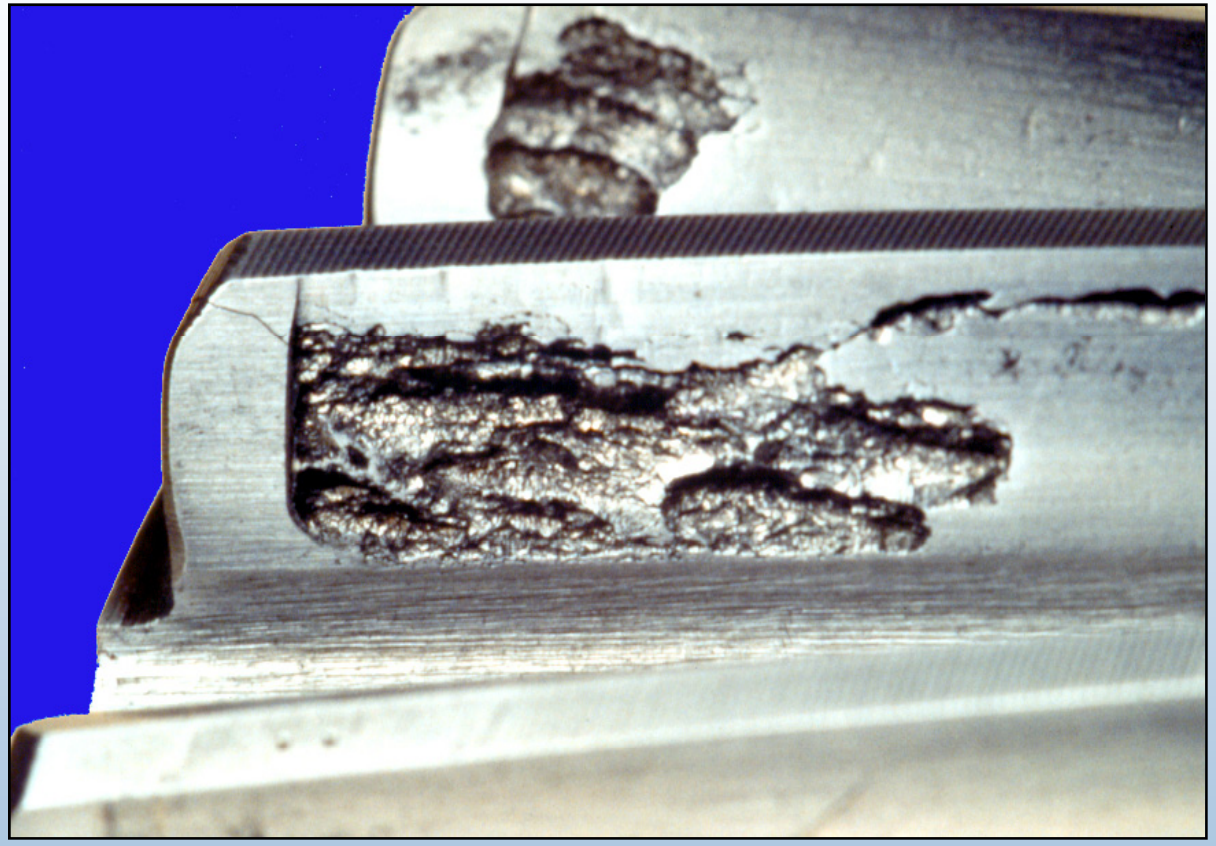

Class/Mode	Hertzian Fatigue/Macropitting/Spall	5.1.3
Definition	Progressive macropitting with pits that coalesce.	
Morphology	Irregular craters covering a significant area of active tooth surface.	
Cause	High contact stress. Low fatigue strength. Inadequate specific film thickness.	
Remedy	Reduce contact stress. Increase fatigue strength. Increase specific film thickness.	

Sun Pinion Micropitting

Copyright GEARTECH

Data Management

- NREL - controls the data base
- ORNL - detailed metallurgical analysis of selected generic hardware, input to NREL data base
- Participants - have access to scrubbed data (no OEM, owner/operator or supplier names)
- Public reports on gross statistics only

Long Term Value

- Identify operating conditions that lead to high failure rates
- Focus reliability research
- Product improvement
- Retrofit designs
- Support reliability centered maintenance
- Basis for reliability centered design
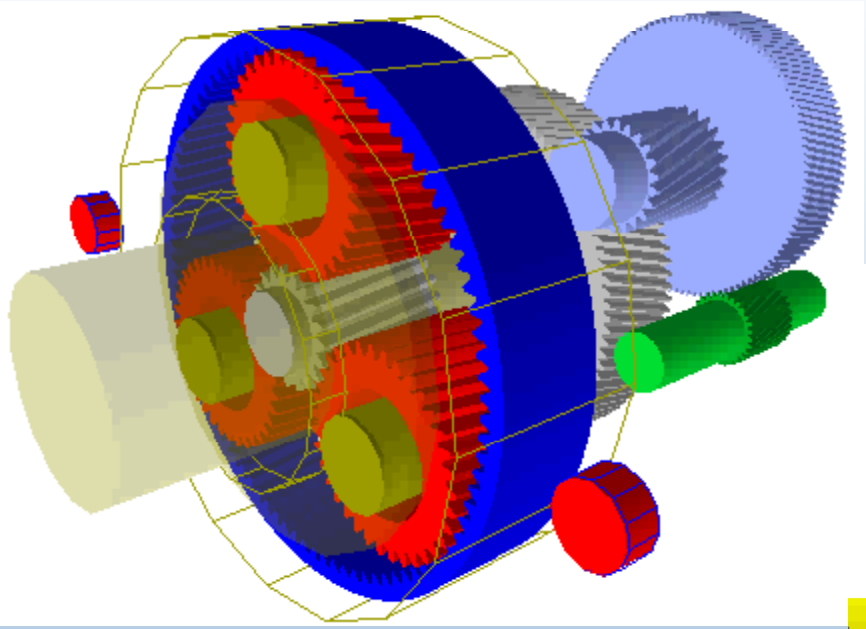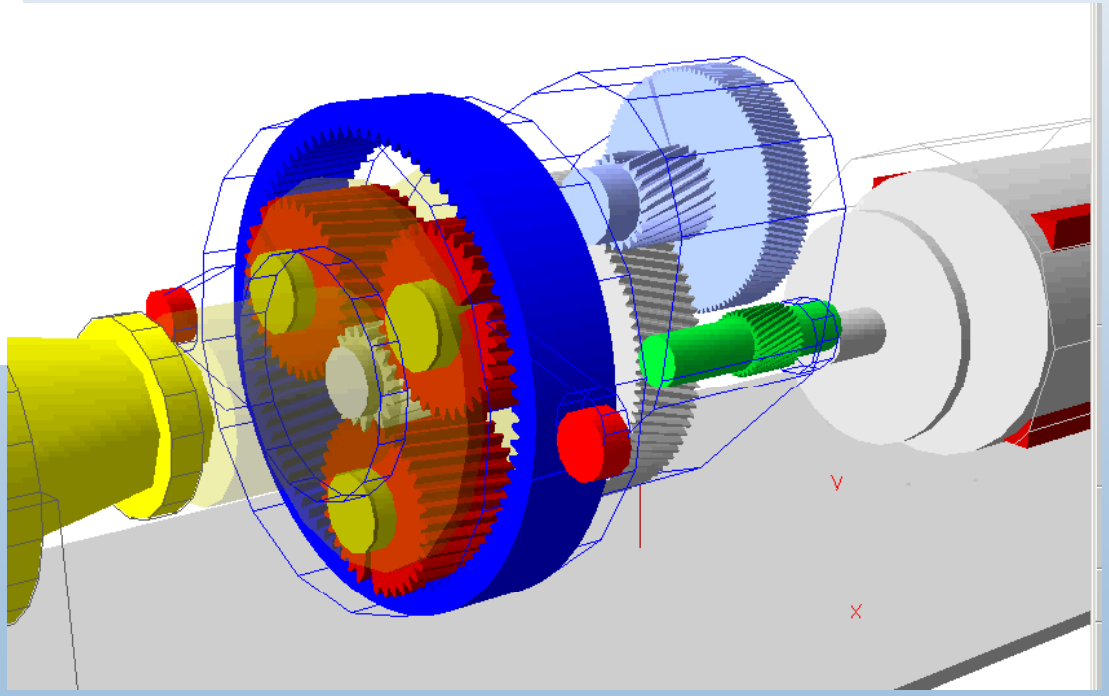
Thanks for Your Participation the NREL Gearbox Reliability Collaborative