# 2009 WIND TURBINE RELIABILITY WORKSHOP

## Reliability: Our vision

June 2009

•The present document, its content, its annexes and/or amendments (the “Document”) has been drawn up by GAMESA CORPORACIÓN TECNOLÓGICA, S.A. (“Gamesa”) for information purposes only, and contains private and confidential information regarding Gamesa and its subsidiaries (the “Company”), directed exclusively to its addressee. Therefore it must not be disclosed, published or distributed, partially or totally, without the prior written consent of Gamesa, and in any case expressly indicating the fact that Gamesa is the owner of all the intellectual property. All the content of the Document, whether it is texts, images, brands, trademarks, combination of colours or any other element, its structure and design, the selection and way of presenting the information, are protected by intellectual and industrial property rights owned by Gamesa, that the addressee of the Document must respect. In particular (notwithstanding the general confidentiality obligation), the addressee shall not reproduce (except for private use), copy, transform, distribute or publish to any other third party, any of the information, totally or partially.

# INDEX

- Introduction to Gamesa
- Projects
  - Gearbox Reliability Collaborative (GRC)
  - Reliawind
  - Operational experience
  - Reliability Centered Maintenance (RCM)
- USA fleet


Copyright 2009 Gamesa Corporación Tecnológica, S.A.

# Introduction to Gamesa

**MISSION**

- **Satisfy the needs of our CLIENTS**
- **Create value for our SHAREHOLDERS**
- **Grow with our EMPLOYEES AND SUPPLIERS**
- **Improve the quality of life of our COMMUNITY**

**Our Vision is to be a leader in the development of technologies for the energetic sustainability**


Copyright 2009 Gamesa Corporación Tecnológica, S.A.

# Introduction to Gamesa. Business units

Gamesa

## Design and Production

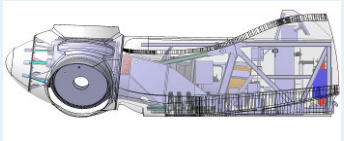

- Design, production, assembly, and operation of wind turbines.

## Energy

- Development, construction and sale of wind farms.

## Energy solutions

- Different solutions of efficiency, energy saving and sustainable energy production.


Copyright 2009 Gamesa Corporación Tecnológica, S.A.

# Introduction to Gamesa. World presence.

## USA

**Production Centers:**
2 in Pennsylvania

**Components:**
Nacelle Assembly
Blades

**Capacity:**
900 MW

## EUROPE

Headquarter in Spain

**Production Centers:**
25 in Spain

**Components:**
Nacelle Assembly
Blades
Gearboxes
Generators
Electric
Control Software
Towers

**Capacity:**
2,100 MW

## CHINA

**Production Centers:**
4 in Tianjin

**Components:**
Nacelle Assembly
Blades
Gearboxes

**Capacity:**
600 MW

**Industrial presence in the principal wind markets of the world**


Copyright 2009 Gamesa Corporación Tecnológica, S.A.

# Introduction to Gamesa. Catalogue.

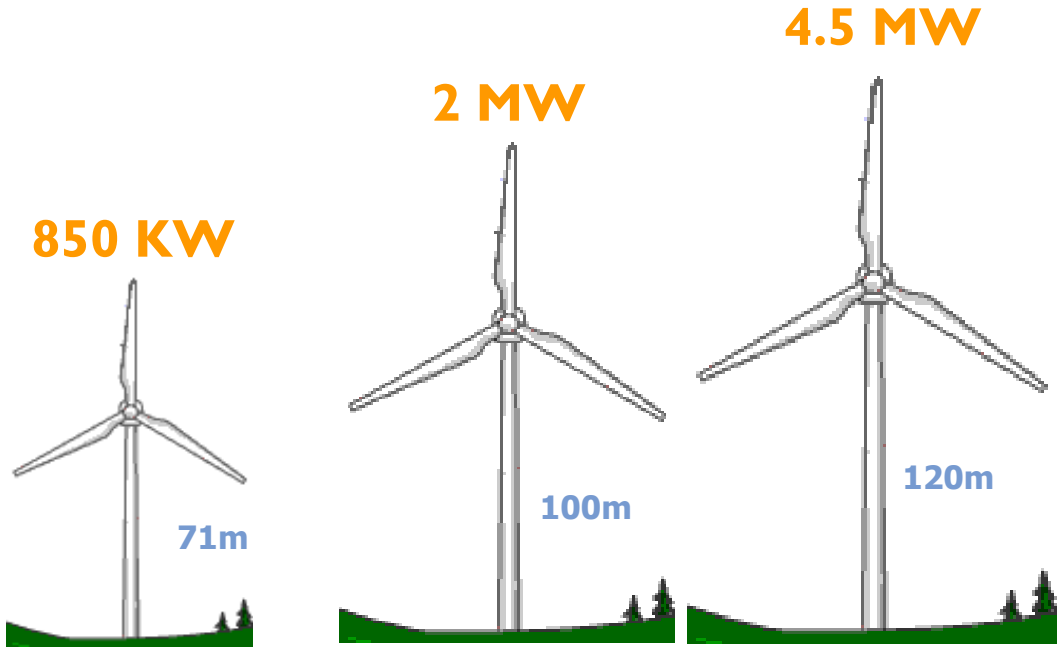


| Gama | G5x | G8x | G10x |
|---|---|---|---|
| Launched | 2000 / 2001 | 2002 | 2010 |


Copyright 2009 Gamesa Corporación Tecnológica, S.A.

# Introduction to Gamesa Innovation & Technology. Leadership in sustainable energy developments.

- **5 R&D centers between Spain and Denmark**
- **40 MM€** invested in 2006 and more than 200 MM€ in the last 5 years
- 120 patent families submitted at 2008 closing
- Some projects:
  - **Windlider 2015.** Development of a new generation wind turbine
  - **Reliawind.** Improvement in behavior and availability of wind turbines.
  - **Upwind.** Development of new generation rotors

Copyright 2009 Gamesa Corporación Tecnológica, S.A.

# Projects: GRC

## Motivation to participate:

- Gamesa has a huge fleet of 660kW and 850kW wind turbines world wide spread. Interest is obvious, as gearbox and wind turbine used for GRC investigation is about this size.
- Gamesa objective: WTG availability
- Project objectives:
  - Specific gearbox model development
  - Bench test
  - Field test

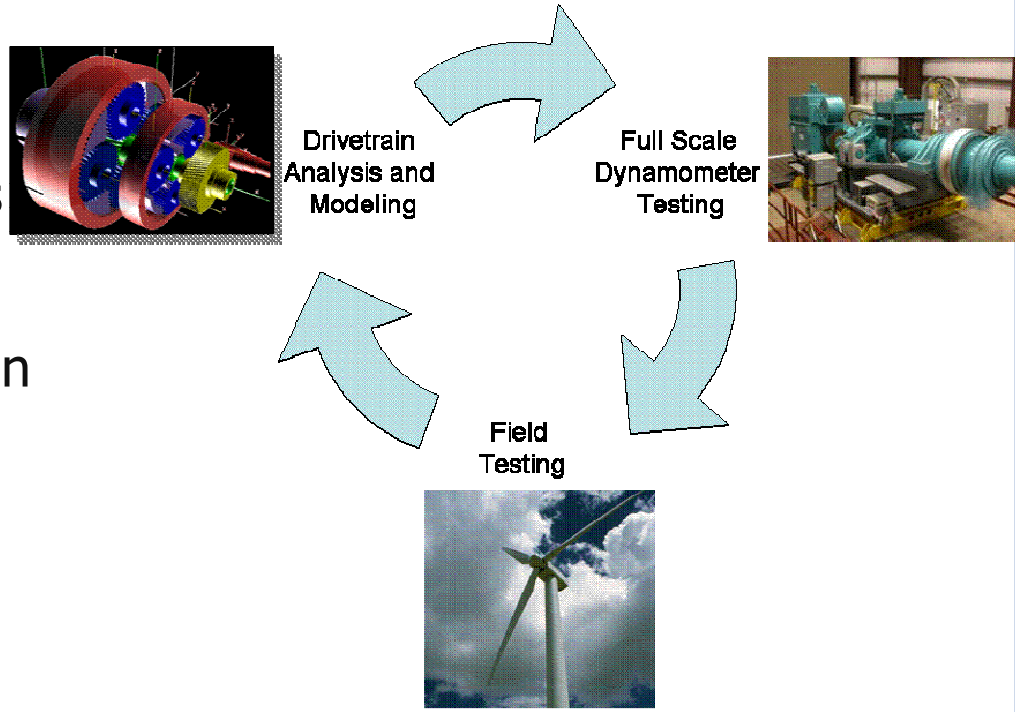



Copyright 2009 Gamesa Corporación Tecnológica, S.A.

# Projects: GRC

Gamesa Contributions

- Round Robin analysis
- Contribution to bearing database
- Gearbox design analysis to confirm GRC analyses
- Data analysis from dynamometer and field test results (to a limited extent)

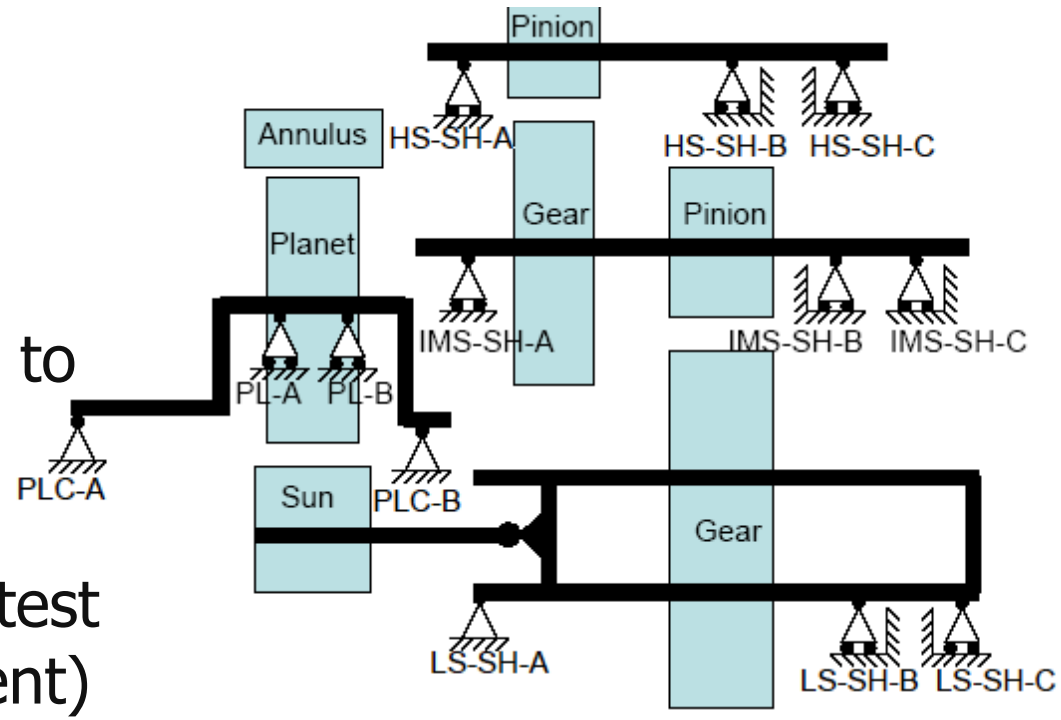



Copyright 2009 Gamesa Corporación Tecnológica, S.A.

# Projects: ReliaWind

OBJECTIVES:

- Identify Critical Failures and Components
- Understand Failures and their Mechanisms
- Define the Logical Architecture of effective Supervisory Control and Condition Monitoring System
- Demonstrate the Principles of the Project Findings
- Train partners and other Wind Energy sector stakeholders
- Disseminate the achieved new knowledge.

Copyright 2009 Gamesa Corporación Tecnológica, S.A.

# Projects: ReliaWind

QUANTITATIVE OBJECTIVES:

- Mean Time Between Failures (MTBF):
  - Offshore: 20% increase
  - Onshore: 10% increase
- Mean Time to Repair (MTTR)
  - Offshore: 50% reduction
  - Onshore: 20% reduction
- Operational Availability (%)
  - Offshore availability: 97-98%, (currently 85-90%)
  - Onshore availability: 98-99% (currently 97-98%)
- Cost of Energy (CoE): < 0.04 €/kWh


Copyright 2009 Gamesa Corporación Tecnológica, S.A.

# Projects: ReliaWind

## RESULTS:

### Reliability Model for R80

**R80**: Represents the present installed 1.5-2 MW WTG. Reliability Data obtain from this configuration will be use to identify critical components and to define reliability allocations for future designs.

Relex Architect - [R80_RP&RBD, System: ROTOR MODULE]

File Edit View Insert Tools System Prediction Filter Tree Window Help

System Tree

| Name | Part Number | System Tree Identifier | Reference Designator | User Text 1 |
|---|---|---|---|---|
| ROTOR MODULE | WTG80A | System | | |
| HYDRAULIC PITCH SYSTEM | WTG80AA | System307 | | |
| HYDRAULIC CYLINDERS | WTG80AAA | System308 | | |
| DISTRIBUTOR BLOCK WITH FILTER | WTG80AAB | System345 | | |
| LEAK OIL CONTAINER | WTG80AAC | System354 | | |
| ACCUMULATORS | WTG80AAD | System361 | | |
| HYDRAULIC CIRCUIT | WTG80AAE | System364 | | |
| LEAK OIL CONTAINER -CYLINDER HYDRAULIC CIRCUIT | WTG80AAEA | System365 | | |
| CYLINDER-ACCUMULATOR HYDRAULIC CIRCUIT | WTG80AAEB | System368 | | |
| CYLINDER-DISTRIBUTOR BLOCK HYDR.CIRCUIT | WTG80AAEC | System374 | | |
| CYLINDER TUBE HYDRAULIC CIRCUIT | WTG80AAED | System381 | | |
| DISTRIBUTOR BLOCK-ACCUMULATOR HYDRAULIC CIRCUIT | WTG80AAEE | System394 | | |
| DISTRIBUTOR-LEAK OIL TANK HYDRAULIC CIRCUIT | WTG80AAEF | System400 | | |
| LEAK OIL CONTAINER TAP | WTG80AAEG | System407 | | |
| PITCH SYSTEM BRACKETS | WTG80AAF | System413 | | |
| ACCUMULATOR-LEAK OIL TANK-DISTRIBUTOR BRACKET | WTG80AAFA | System414 | | |
| CYLINDER ACCUMULATOR BRACKET | WTG80AAFB | System420 | | |
| ROTATING UNION | WTG80AAG | System431 | | |
| HYDRAULIC ROTATING JOINT | HPS-88 | System432 | NPRD-6728 | |
| HYDRAULIC ELEMENTS ROTATING JOINT | WTG80AAGA | System433 | | |
| ROTATING UNION FIXER SYSTEM | WTG80AAGB | System446 | | |
| ELECTRIC ROTATING UNION FIXER | HPS-101 | System447 | NPRD-497 | |
| ELECTRIC ROTATING UNION | WTG80AAGC | System448 | | |

System Tree | Configuration Table

Parts Table

Filter

Parts Table | General Data | Calculation Data

Ready | Mechanical | FPMH | System Tree Items | 20 of 26



Copyright 2009 Gamesa Corporación Tecnológica, S.A.

# Projects: ReliaWind

RESULTS (Cont.)

- Reliability Critical Components identified and the failure modes for the R80, based on the analysis of available historical maintenance and operational data.
- Reliability Model for R80: The reliability model has more than 1000 parts allocated in system and sub-systems. This model is essential for evaluation of changes in design, process or materials.
- Components' Reliability Library: Up to 6.000 different P/Ns are identified for all Gamesa products. This library will be basic for future reliability predictions.

Copyright 2009 Gamesa Corporación Tecnológica, S.A.

# Projects: Operational Experience

OBJECTIVES

- Design and build a historical O&M data base for analysis based on Dynamic Data Analysis software.
- Perform a detail statistical analysis of the data, to obtain the key indicators and possible relations, to get knowledge, improve products and reduce LCC.

Copyright 2009 Games

# Projects: Operational Experience

## PROCESS

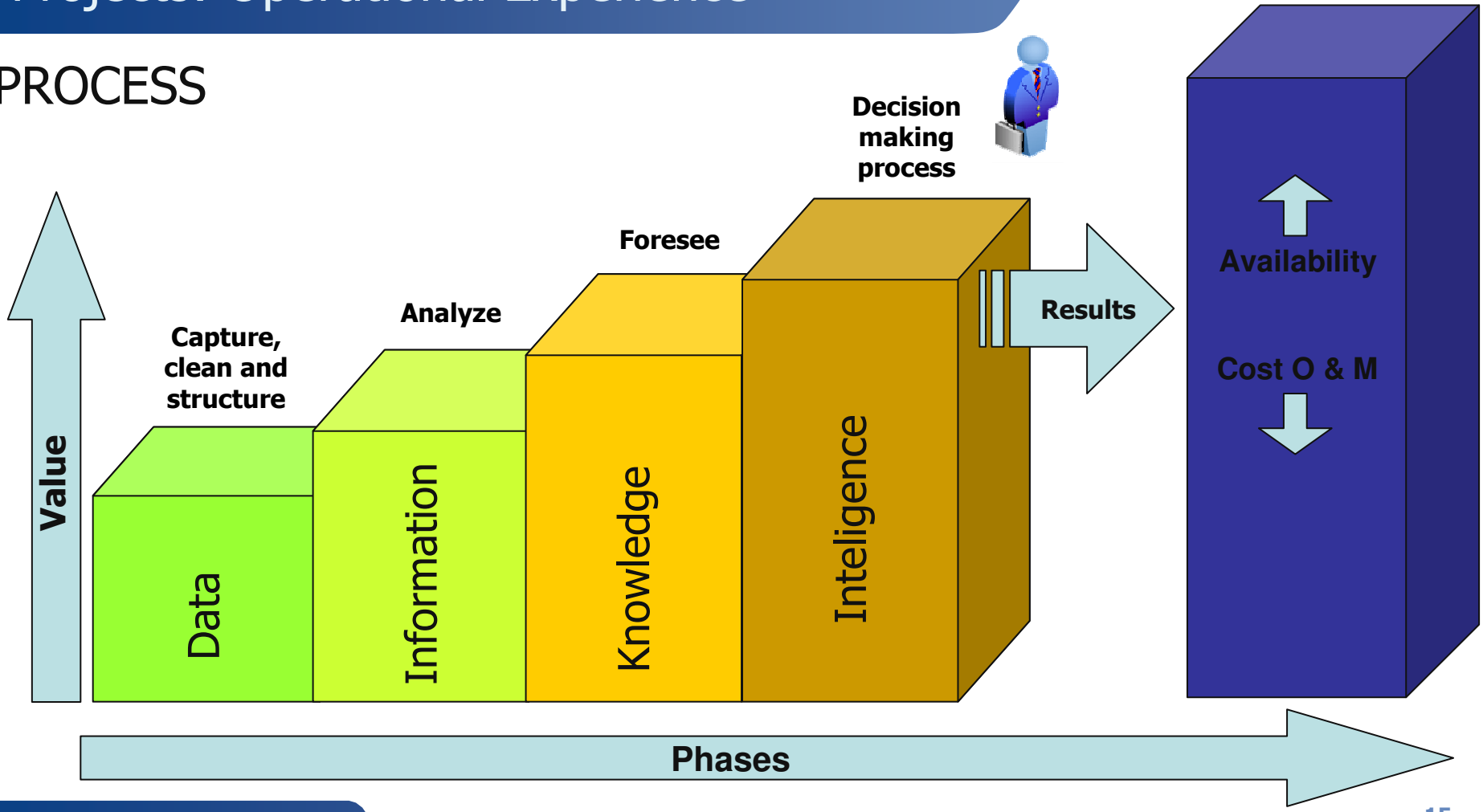



Copyright 2009 Gamesa Corporación Tecnológica, S.A.

# Projects: Operational Experience

## Data Description:

- WTGs: more than 12.000
- More than 14 years in operation
- Operational Hours: more than 450 million
- Work Orders: more than 1 million
- SCADA records: wind speed, energy production alarms, etc. several billions.

Copyright 2009 Games

# Projects: Operational Experience

Key Indicators

- Availability analysis
- Reliability analysis
  - MTBF
  - Trade-off reliability analysis
- Maintainability
  - Unscheduled Repair times for:
    - Minor repairs
    - Major repairs
  - Scheduled Repair times
  - Alarms analysis

Copyright 2009 Games

# Projects: Operational Experience

## Key Indicators (Cont.)

- Energy production
  - Daily production
  - Wind v. energy
- Cost analysis
  - Unscheduled maintenance cost
  - Scheduled maintenance cost
  - Spare parts consumption

Copyright 2009 Games

# Projects: Operational Experience

## Analysis Dimensions

- All analysis can be performed by:
- Time: specific point or period (It can by sorted by Years/Quarterlies/Months).
- Product type and attributes: WTG (G4X, G5X, G8X) / System (gearbox, generator, blades, etc.) /Component (Part Number, manufacturer).
- Geographical: the area can be restricted to country/ region/ WF/ WTG

Copyright 2009 Games

# Projects: Operational Experience

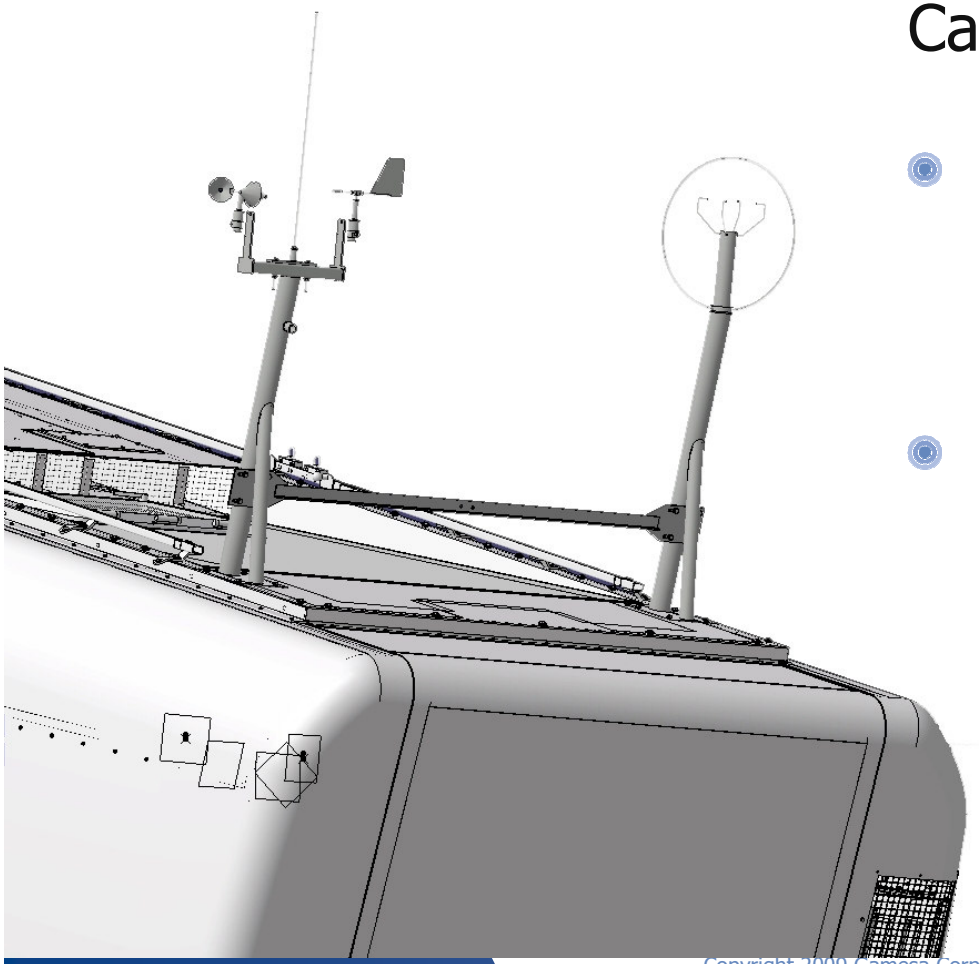

## Case of Success: Nacelle anemometers

- Issue detected:
  - Lost of communication and system malfunction under adverse weather conditions or electromagnetic interferences
- System improvement:
  - Original system: two Thies sonic wind sensors
  - New system: One Thies wind sensor and one NRG IceFree anemometer and wind vane
  - Two different technologies complementing each other


Copyright 2009 Gamesa Corporación Tecnológica, S.A.

# Projects: Reliability Centered Maintenance

## Objectives:

- Optimize tasks and intervals to minimize maintenance cost.
- Reduction of the total preventive maintenance workload compared with existing Maintenance Program.
- Ensure product safety, integrity and operational availability throughout the complete life cycle.
- Tailor maintenance to different Gamesa products.

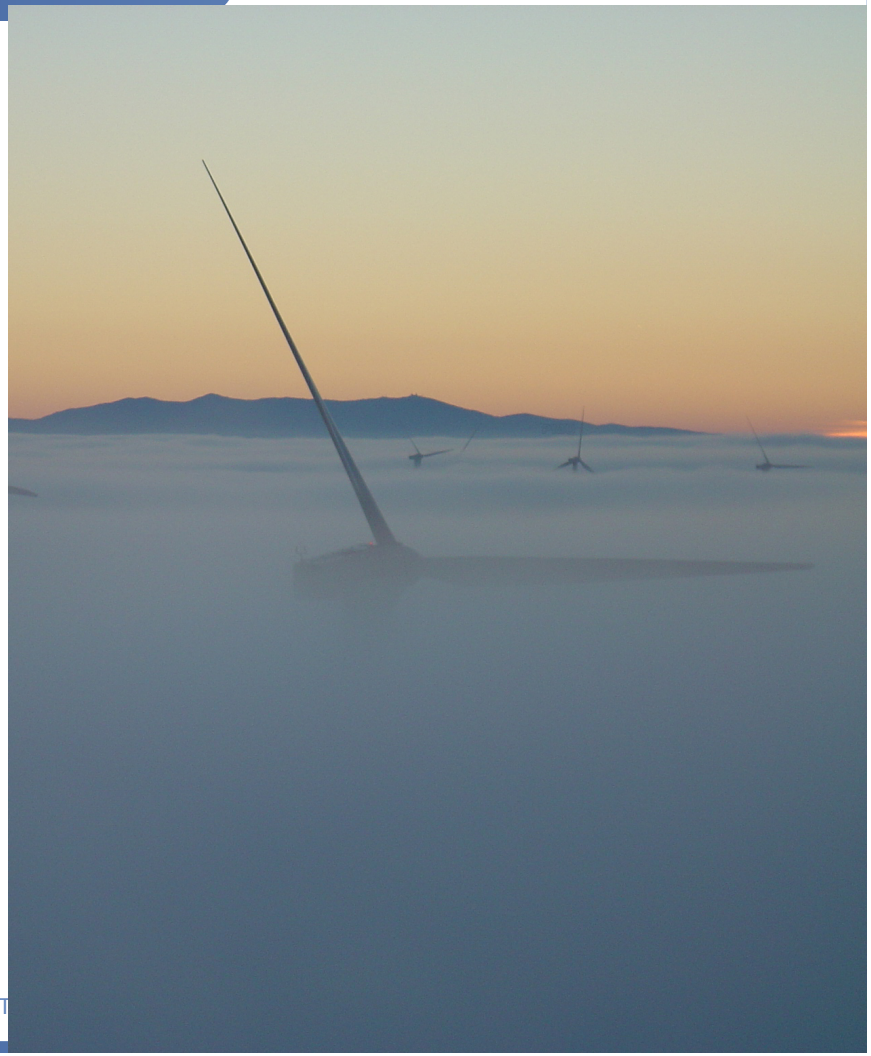



Copyright 2009 Gamesa Corporación T

# Projects: Reliability Centered Maintenance

## Process:

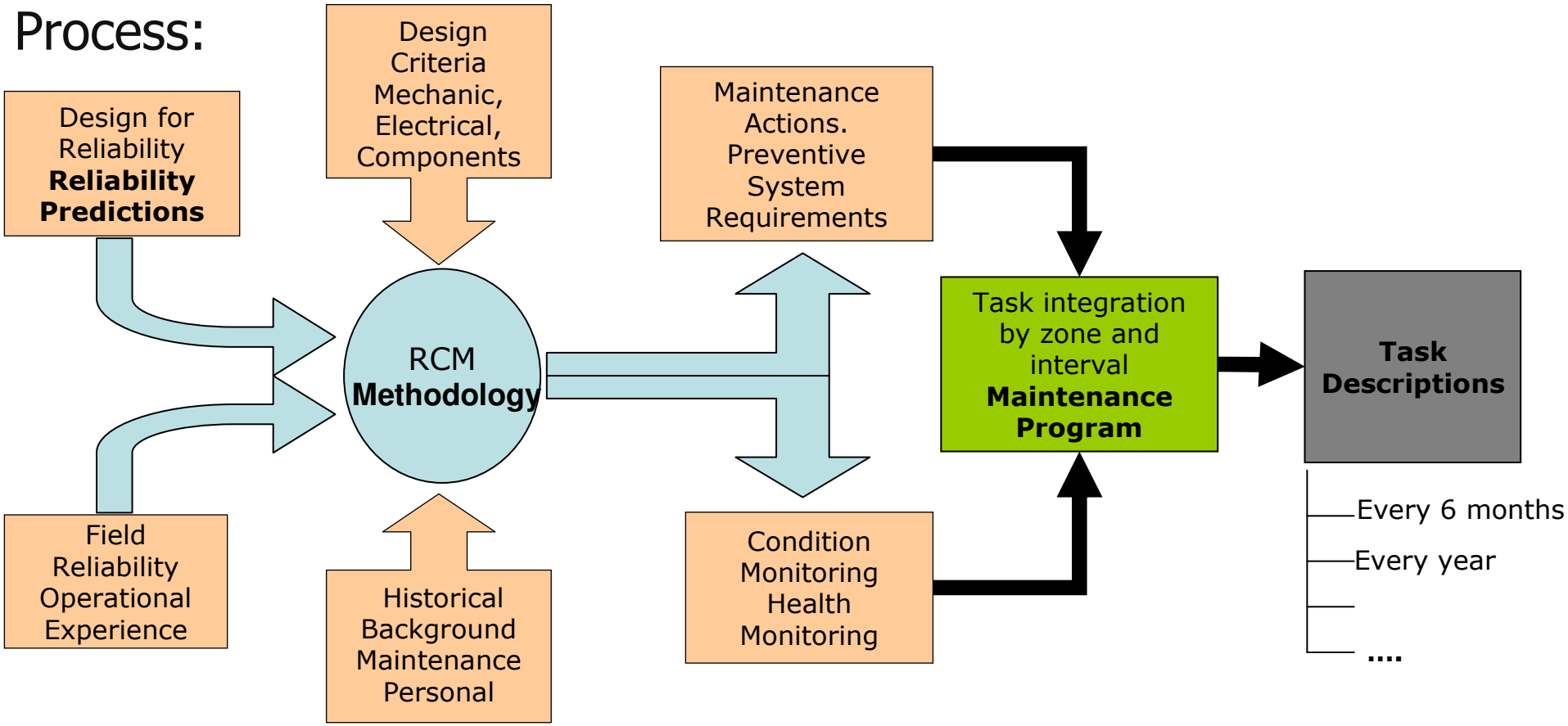



Copyright 2009 Gamesa Corporación Tecnológica, S.A.

# Projects: Reliability Centered Maintenance

## Results (Cont.)

- New optimized Maintenance Program for G5X and G8X.
- Some components have been excluded in the new maintenances programs, due to their failure do not affect safety or availability, and they cannot benefit from scheduled maintenance.
- The new tasks have been integrated by zone and interval based on design analysis and maintenance experience.

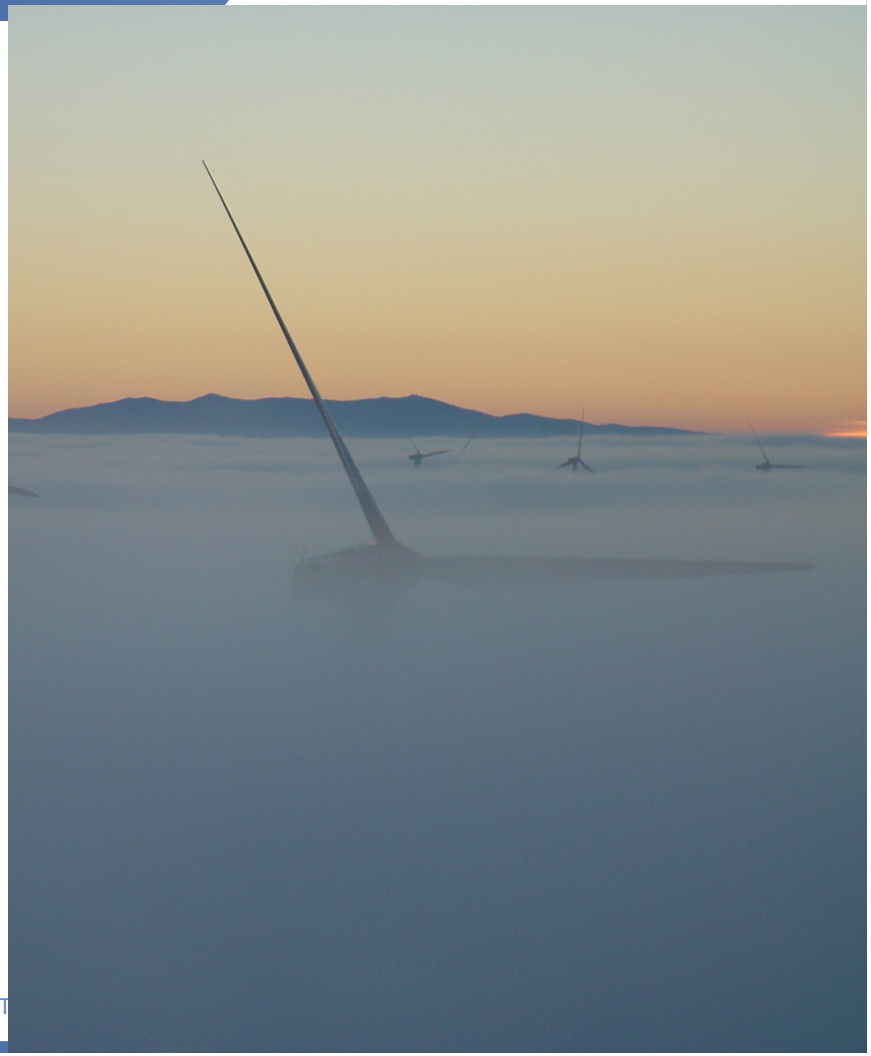


Copyright 2009 Gamesa Corporación T

# USA Fleet

Availability tracking is used for analysis

- Determination of issues which most significantly effect availability.
- Root Cause Analysis (RCA) team
- Feedback to design engineering
- Best practice studies between wind farms.
- Best Practices to maximize both:
  - Contractual Availability
  - Energy Production for Customer

Copyright

# USA Fleet

Solutions – Fast Ramp Up

- Establishment of Centralized Regional Offices
- Regional offices provide flexibility for experienced personnel deployment and training
- Local warehouses for fast deployment of parts
- 24/7 remote control and monitoring

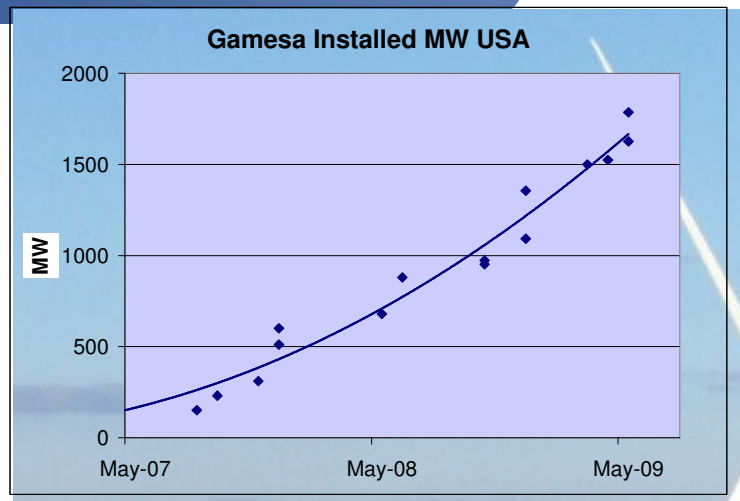




Copyrigh

Gamesa

Thanks for your attention


Copyright 2009 Gamesa Corporación Tecnológica, S.A.