NREL Structural & Aeroelastic Codes

Jason Jonkman
National Renewable Energy Laboratory

Sandia Blade Workshop

May 13, 2008

Introduction & Background

The Big Picture

- Trends in blade design:
  - Lighter weight, lower solidity, & more flexibility
  - Larger diameters & higher tip speeds
  - Built-in curvature & sweep
  - Passive load relief through twist/flap coupling (from material & geometry)
  - Advanced active control with conventional or novel actuators
  - Stability (not just loads) important
- Blades are a single component
- System interactions require coupled analyses with design tools & codes

GE Wind Energy 3.6 MW Turbine

Introduction & Background

Wind Turbine Design Process

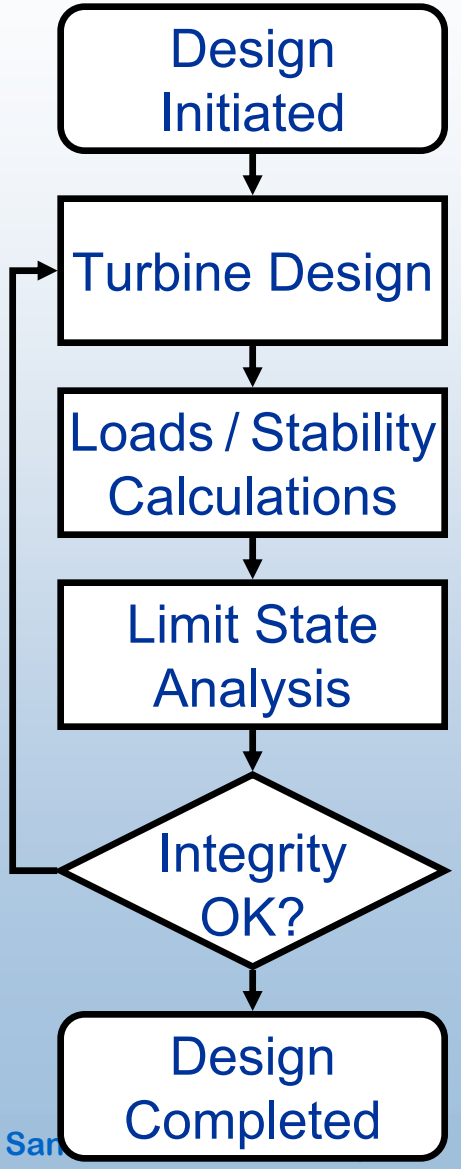

- Standards have codified the design & analysis process
- Coupled aero-hydro-servo-elastic models of the full system are used to calculate loads
- Loads are applied within component-specific models (e.g., FEA) to perform limit state analysis
- Structural integrity achieved when: Design Load ≤ Design Resistance
- Model inputs must be tuned with test data to ensure accurate loads calculations

Introduction & Background

Key NREL Codes in the Blade Design Process

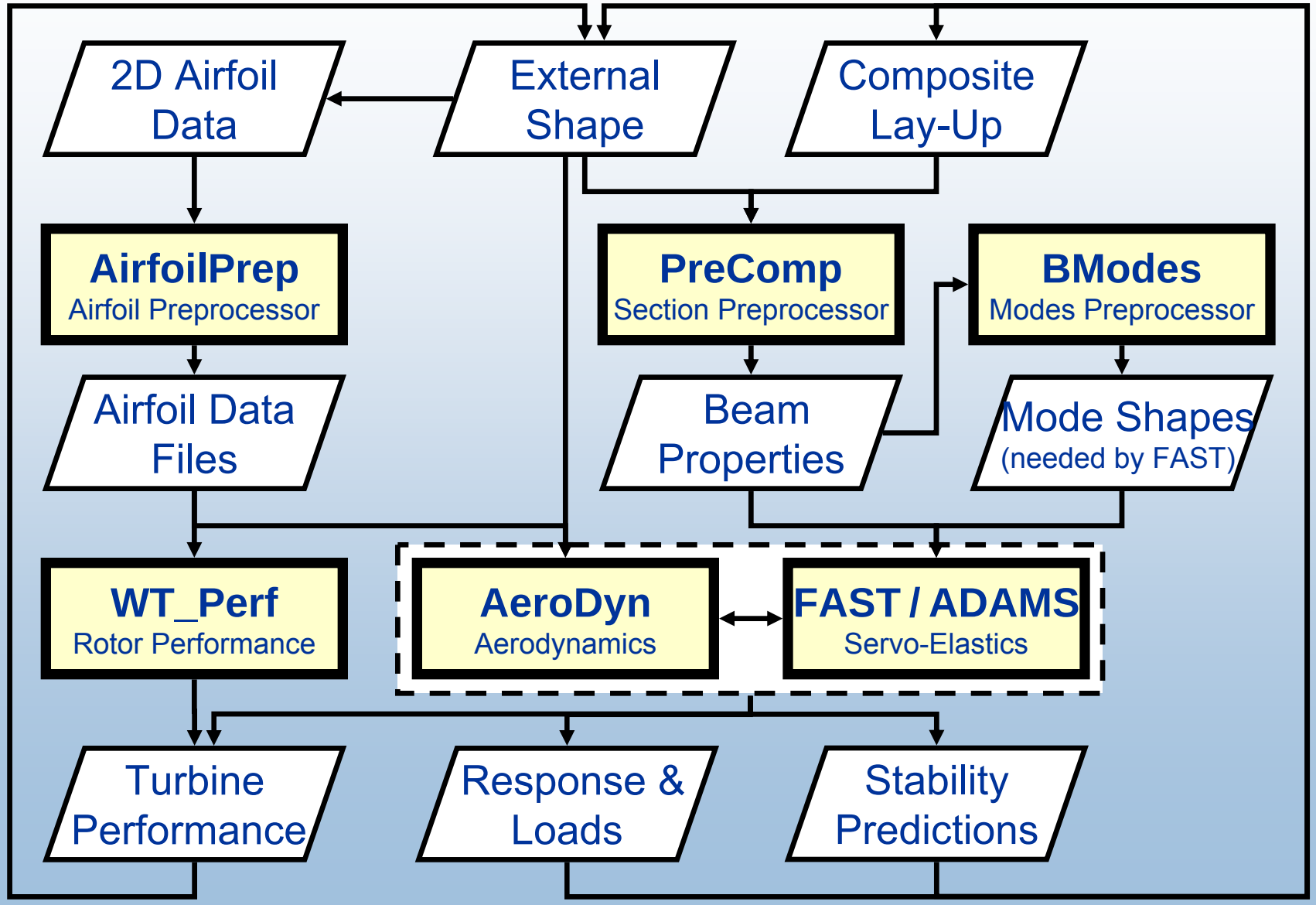

Introduction & Background

Users of NREL-Developed Codes

- There are 100 to 150 domestic & international users

Manufacturers	Consultants	R&D Institutes	Universities
GE	GEC Global Energy Concepts – THE Wind Resource	NREL	MIT
Clipper	Windward Engineering	Sandia National Laboratories	The University of Texas at Austin
Distributed Energy Systems	MMI Engineering – a geosyntec company	cener – centro nacional de energías renovables	Georgia Tech
Knight & Carver	m4 Engineering, Inc.	NASA	Texas Tech University
IMPSA wind	MLS		University of Massachusetts
ecotècnia			Oregon Institute of Technology
TEROM			Renewable Energy Research Laboratory
Southwest Windpower – Renewable Energy Made Simple			Colorado School of Mines 1874
endurance wind power inc.			Oregon State University OSU
Bergey WindPower			The University of Toledo
			Colorado State University
			UC Davis – University of California
			Northern Arizona University
			Colorado – University of Colorado at Boulder
			Rensselaer
			Boise State University
			Clarkson University – defy convention
			TU Delft – Technische Universiteit Delft
			NTNU
			University of Strathclyde Glasgow
			DTU
			Universität Stuttgart
			The University of Auckland

Design Codes
AirfoilPrep

- Generates airfoil data files from 2D data
- Developed by Windward Engineering & NREL
- Key Features:
  - Adjusts 2D data for rotational augmentation (3D effects):
    - Selig/Du for lift (stall delay)
    - Eggers for drag
  - Extrapolates to high AoA:
    - uses Viterna method or flat-plate theory for -180º < AoA < 180º data
  - Computes dynamic stall parameters
  - Blends aerodynamic coefficients

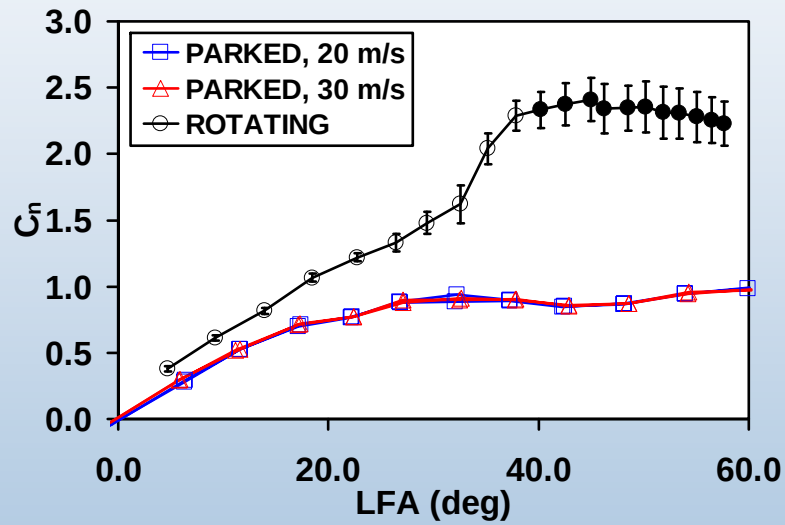

Data from NASA Ames Wind Tunnel: Unsteady Aerodynamics Experiment

- Planned enhancement – Build functionality into **AeroDyn**
- Future opportunity – Include new stall delay models

Design Codes
WT_Perf

- Calculates performance from rotor geometry & airfoil data
- Developed by NREL; descendent of PROP from OSU
- Key features:
  - Steady-state calculations; no dynamics
  - Computes power, torque, thrust, & blade-root bending moment
  - Parametric or combined-case analysis:
    - variations in wind, pitch, & rotor speed
  - Uses BEM theory
- Planned enhancement – Improve sol'n
- Future opportunities:
  - Add algorithm for tuning airfoil data to match measured performance
  - Add blade optimization algorithm
  - Add GDW & vortex-wake algorithms

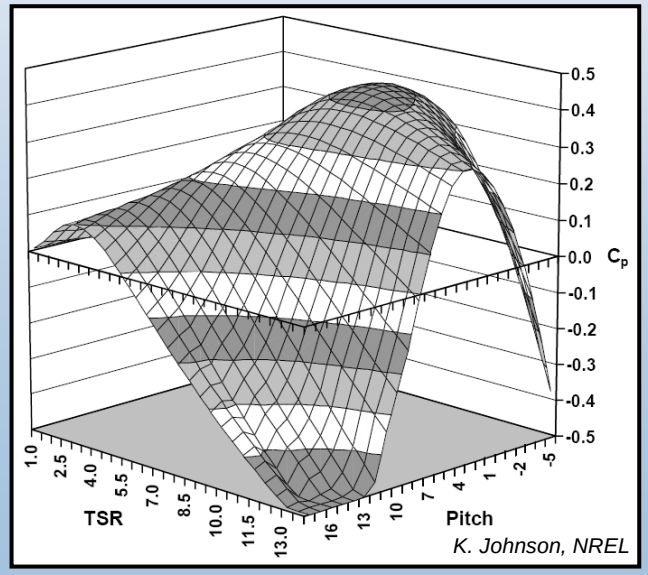

Power Coefficient for the CART

Design Codes
PreComp

- Computes coupled section properties of composite blades for beam-type models
- Developed by NREL
- Key features:
  - Inputs are the blade external shape & internal lay-up of composite laminas
  - Section properties are found directly:
    - Direct & cross stiffnesses & inertias
    - Locations of tension, shear, & mass centers
    - Orientation of principal elastic & inertia axes
  - Uses a combined laminate theory (modified) with shear flow approach

$$\begin{Bmatrix} F_X \\ M_Y \\ M_Z \\ T_X \end{Bmatrix} = \begin{bmatrix} \overline{EA} & S_{af} & S_{al} & S_{at} \\ S_{af} & \overline{EI}_{flap} & S_{fl} & S_{ft} \\ S_{al} & S_{fl} & \overline{EI}_{lag} & S_{lt} \\ S_{at} & S_{ft} & S_{lt} & \overline{GJ} \end{bmatrix} \begin{Bmatrix} u_e' \\ w'' \\ v'' \\ \theta' \end{Bmatrix}$$

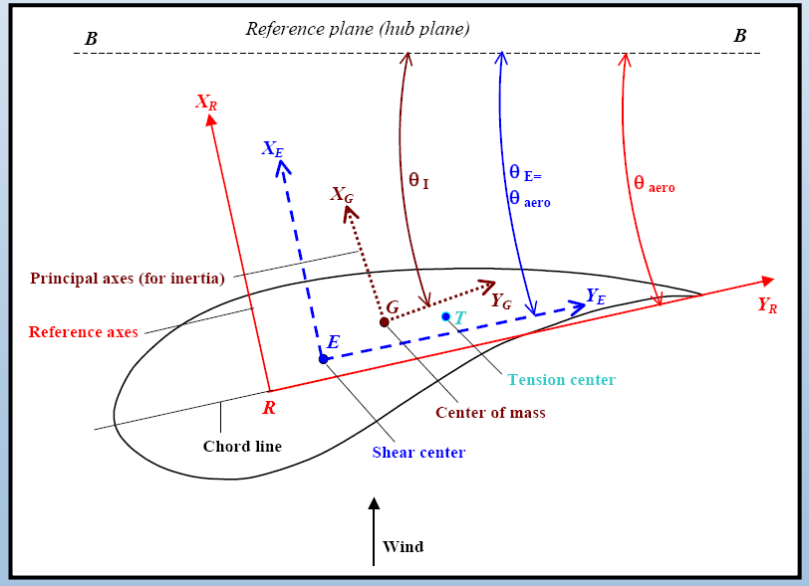

Design Codes
PreComp (cont)

- Underlying assumptions:
  - Straight blade
  - Webs normal to chord
  - Thin-walled closed section
  - No transverse shearing
  - No in-plane distortion
  - Free warping (torsion stiffness possibly invalid near root)
- Planned enhancements:
  - Allow for arbitrary orientation of webs
  - Allow for in-plane distortion
  - Add stress analysis
- Future opportunities:
  - Add inverse design algorithm
  - Allow for built-in curvature & sweep

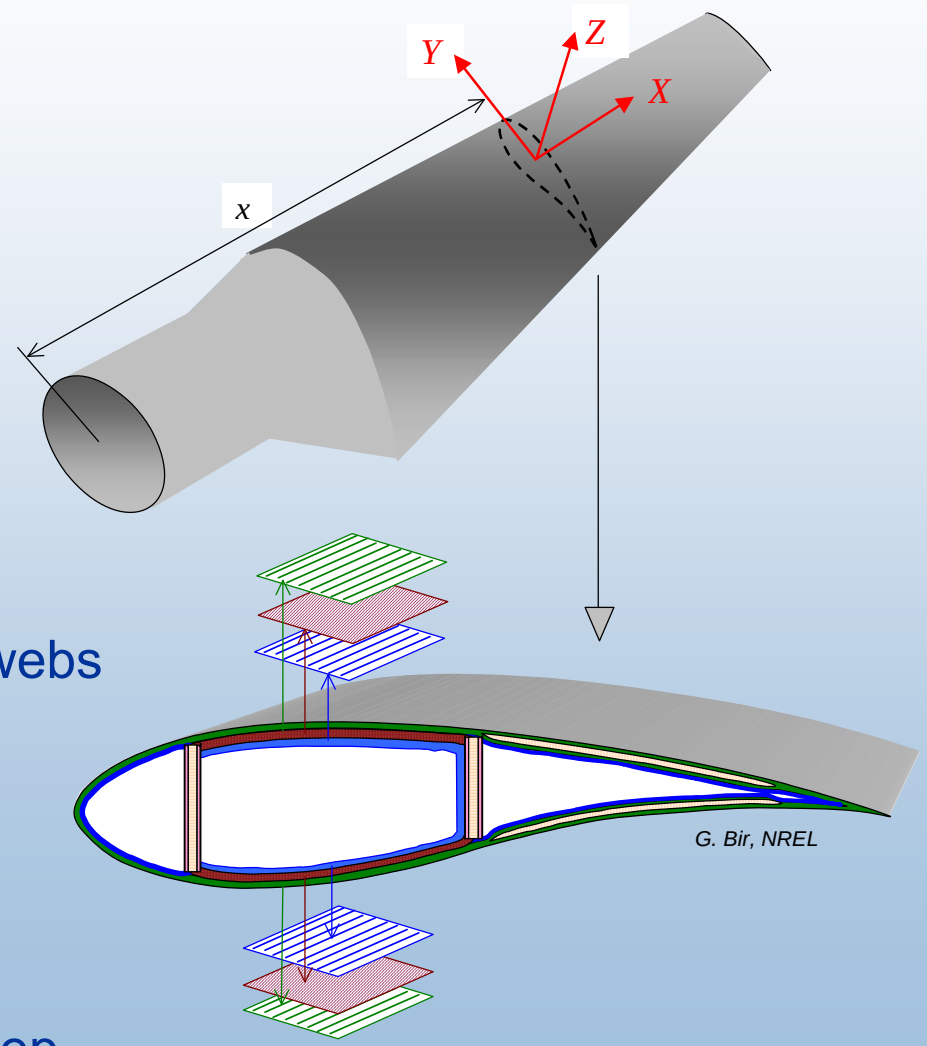

Design Codes
BModes

- Computes coupled mode shapes & frequencies of blades & towers
- Developed by NREL; descendent of UMARC
- Key features:
  - Computes coupled axial-flap-lag-torsion modes
  - Inputs for a blade are the distributed geometric & structural properties, rotational speed, & pitch control setting
  - Based on a 15-DOF finite element developed specifically to handle rotation-related terms
  - Linearized equations derived analytically
  - Also considers towers with tension wires, flexible foundations, & floating platforms

Design Codes
BModes (cont)

- Underlying assumptions:
  - Cantilevered blade root
  - Straight blade
  - Isotropic material with chord-wise mass & elastic offsets:
    - geometric couplings are included
    - material couplings are not

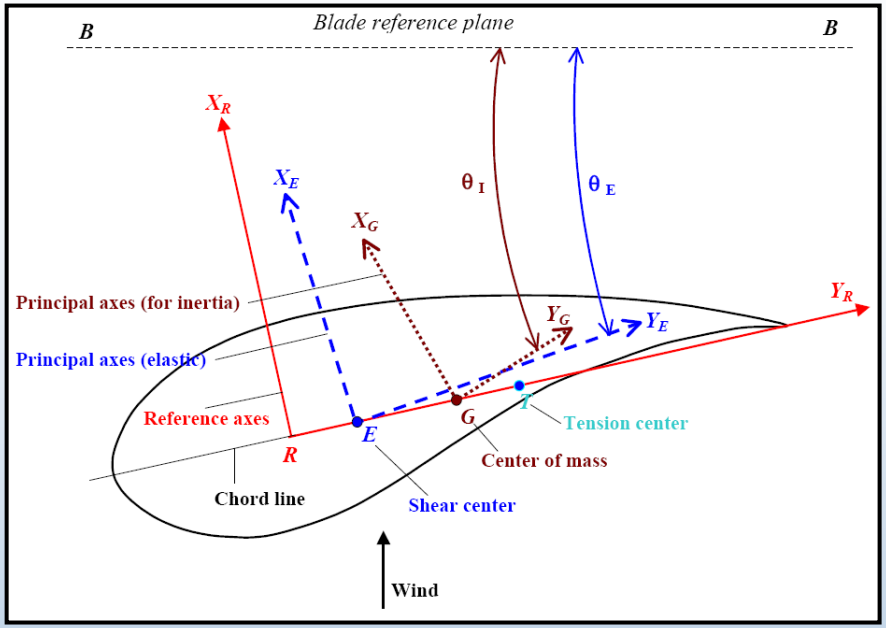

- Planned enhancement:
  - Import modes directly to **FAST**
- Future opportunities:
  - Allow for hinged blade root
  - Allow for anisotropic material (from **PreComp**)
  - Allow for built-in curvature & sweep
  - Build into **FAST** for runtime calculation of modes

Design Codes

Coupled Aero-Hydro-Servo-Elastic Simulation

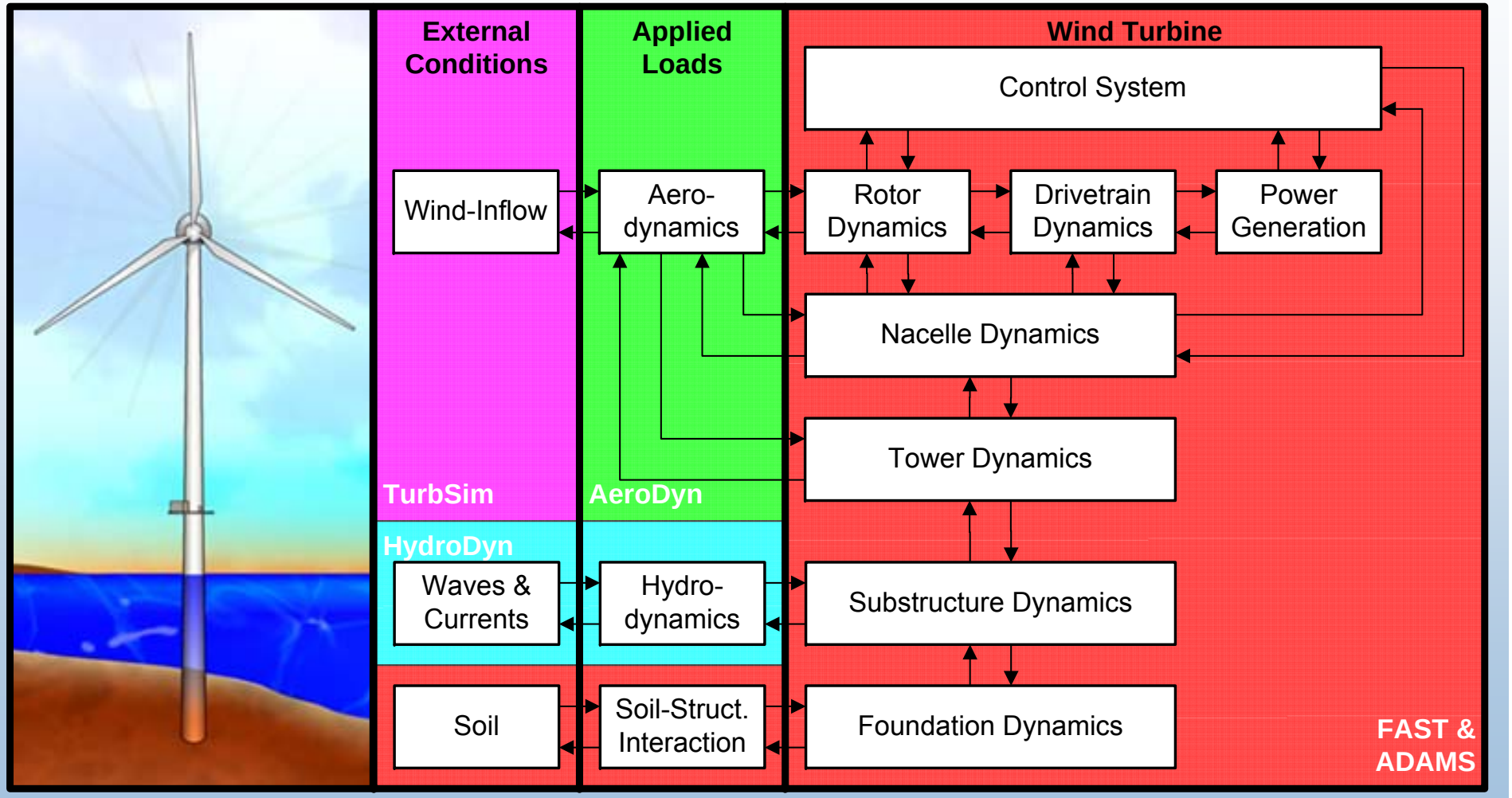

Design Codes
AeroDyn

- Computes aerodynamic loads as part of the aero-elastic solution
- Developed by Windward Engineering & NREL
- Key features:
  - Equilibrium (BEM) & dynamic (GDW) wake algorithms
  - Hub loss, tip loss, & skewed wake corrections in BEM (intrinsic to GDW)
  - Beddoes-Leishman dynamic stall
  - Turbulent & deterministic wind inputs
  - Fully coupled to **FAST** & **ADAMS** for aero-elastic interaction

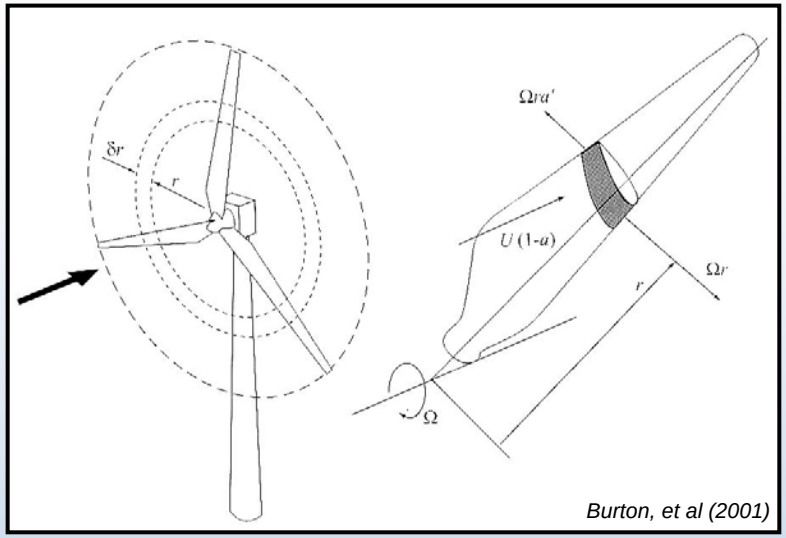

Burton, et al (2001)

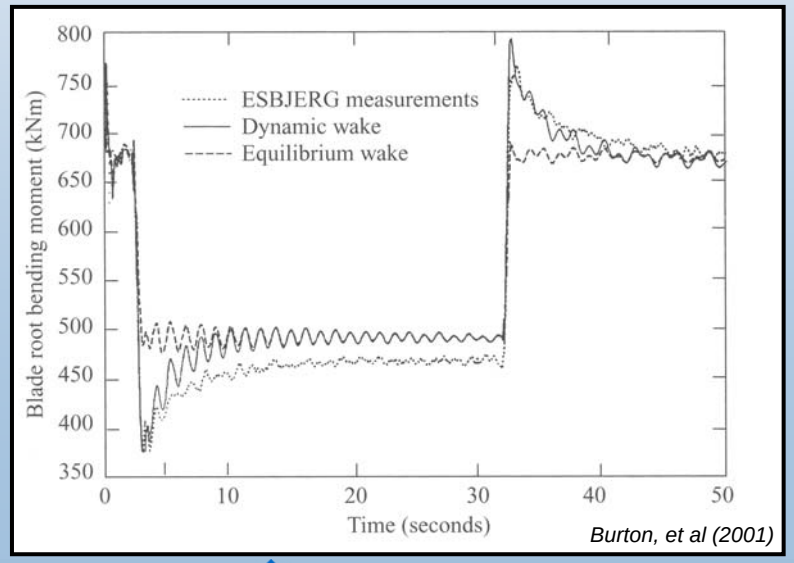

Burton, et al (2001)

Design Codes
AeroDyn (cont)

- Planned enhancements (major overhaul recently initiated):
  - Improve functionality, readability, & usability
  - Eliminate errors
  - Modularize code
  - Develop co-simulation approach with redeveloped interface
  - Automate calculation of rotational augmentation
  - Allow for arbitrary number of GDW flow states
  - Allow for interpolation between airfoil tables based on controller
  - Add tower, nacelle, & hub influence & loading
- Future opportunities:
  - Include new models for BEM corrections & dynamic stall
  - Develop linearized wake & dynamic stall models
  - Add vortex-wake algorithm(s)
  - Add aero-acoustic noise predictor
  - Develop new physics for hydro-kinetic (water) turbines

Design Codes
FAST

- Computes structural-dynamic & control-system responses as part of the aero-hydro-servo-elastic solution
- Developed by NREL; descendent of code from OSU
- Key features:
  - Stands for **F**atigue, **A**erodynamics, **S**tructures, & **T**urbulence
  - Uses a combined modal & multi-body representation:
    - modal — blades and tower
    - rigid — support platform, nacelle, generator, hub, and tail
  - Controls implementation through user-developed subroutines, DLLs, or Simulink® with MATLAB®
  - Nonlinear time-domain analysis
  - Linearization procedure for rotating system with Multi-Blade-Coordinate transformation (MBC)
  - Fully coupled to **AeroDyn** for aero-elastic interaction
  - Evaluated by Germanischer Lloyd WindEnergie
  - Preprocessor for building wind turbine models in **ADAMS**

Design Codes
FAST (cont)

- 24 DOFs available for 3-bladed turbine; 22 DOFs available for 2-bladed turbine:
  - Blade flexibility — 2 flap and 1 edge mode DOF per blade
  - Tower flexibility — 2 fore-aft and 2 side-to-side mode DOFs
  - Drivetrain — 1 variable generator speed DOF and 1 shaft torsion DOF
  - Nacelle yaw — 1 yaw hinge DOF
  - Rotor teeter — 1 rotor teeter hinge DOF with optional δ_3 (for 2-bladed rotor only)
  - Rotor-furl — 1 furl hinge DOF of *arbitrary orientation and location* between the nacelle & rotor
  - Tail-furl — 1 furl hinge DOF of *arbitrary orientation and location* between the nacelle & tail
  - Platform — 3 translation (surge, sway, and heave) and 3 rotation (roll, pitch, and yaw) DOFs

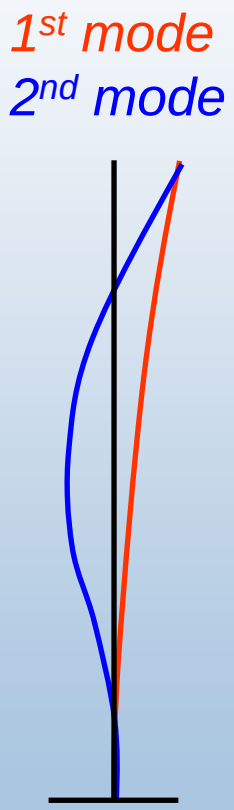

Modal Representation

Design Codes
FAST (cont)

- Turbine configurations:
  - 2- or 3-bladed HAWTs
  - Upwind or downwind rotor
  - Rigid or teetering hub
  - Rotor- &/or tail-furling
  - Land- or sea-based
  - Offshore monopiles or floating

- Underlying assumptions (for blades):
  - Straight blade
  - Isotropic material with no offsets:
    - couplings only due to pretwist
  - No axial or torsion deflections
  - Small to moderate deflections characterized by lowest modes
  - No blade-pitch actuator dynamics

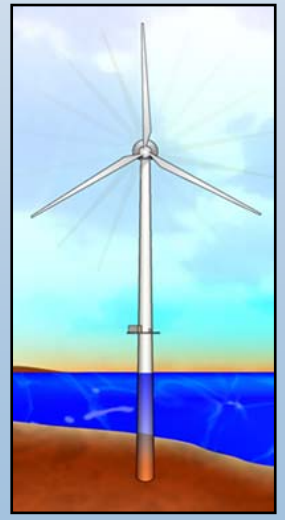

Design Codes
FAST (cont)

- Loads analysis with **FAST**:
  - Involves running 1000s of simulations & processing the output
  - Identifies ultimate and fatigue loads
  - Identifies sources of critical loads
  - Helps identify design changes to lower loads

Design Situation	DLC	Wind Condition	Wave Condition	Directionality	Other Conditions	Type of Analysis
Power production	1.x					
Power production plus occurrence of fault	2.x					
Start up	3.x					
Normal shut down	4.x					
Emergency shut down	5.x					
Parked	6.x					
Parked with fault	7.x					
Transport, assembly, and maintenance	8.x					

Load Case Matrix

- Stability analysis with **FAST**:
  - Involves linearizing the system, applying MBC, & eigenanalysis:
    - MBC expresses cumulative effect of blade dynamics in the fixed frame
    - eigenanalysis determines full-system modes, frequencies, & damping
  - Identifies sources of instabilities:
    - Modes with negative damping
    - Couplings between system modes can lead to self-excitation
  - Helps identify design changes to eliminate instabilities

Design Codes
FAST (cont)

- Planned enhancements (for blades):
  - Interface to overhauled **AeroDyn**
  - Add chordwise mass & elastic offsets
  - Replace uncoupled flap & lag modes with coupled axial-flap-lag-torsion modes (from **BModes**)
  - Increase number of blade mode DOFs
  - Add blade-pitch DOFs & actuator models
- Future opportunities (for blades):
  - Allow for hinged blade root
  - Allow for anisotropic material (from **PreComp**)
  - Allow for built-in curvature & sweep
  - Build in **BModes** for runtime calculation of modes
  - Add animation capability

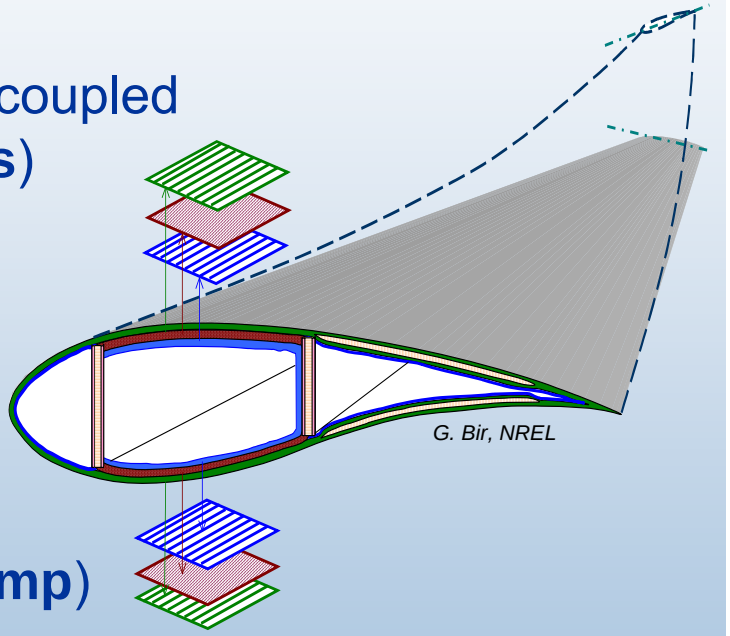

Design Codes
MSC.ADAMS®

- Computes structural-dynamic & control-system responses as part of the aero-hydro-servo-elastic solution
- Commercial product from MSC Software; **FAST** preprocessor & ADAMS-to-AeroDyn interface (**A2AD**) developed by NREL & Windward Engineering
- Key features:
  - Stands for **A**utomatic **D**ynamic **A**nalysis of **M**echanical **S**ystems
  - Uses a multi-body representation
  - Virtually unlimited structural DOFs
  - Controls implementation through user-developed subroutines or DLLs
  - Nonlinear time-domain analysis
  - Linearization of nonrotating system
  - Fully coupled to **AeroDyn** through **A2AD** interface for aero-elastic interaction
  - Evaluated by Germanischer Lloyd WindEnergie
  - Datasets can be created by **FAST**

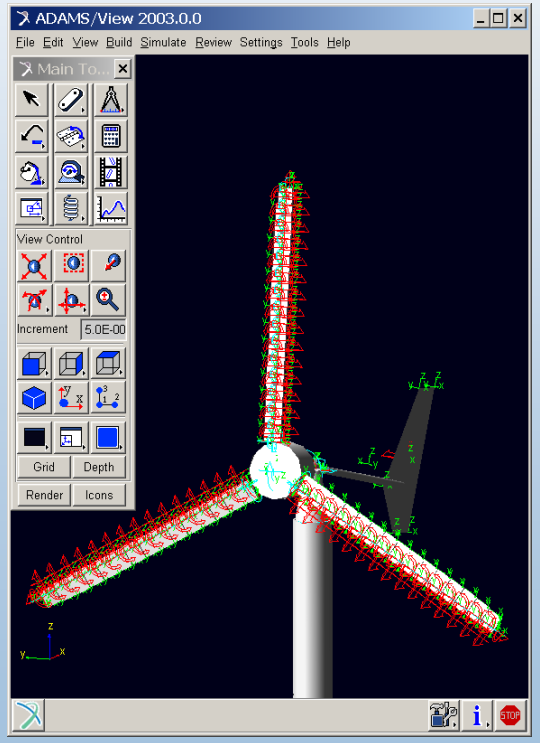

ADAMS Model Generated by FAST

Design Codes
MSC.ADAMS® (cont)

- Bypassed limitations of **FAST** (for blades):
  - Axial & torsion DOFs
  - Mass & elastic offsets
  - Anisotropic materials
  - Built-in curvature & sweep (improvements needed)
  - Larger & higher-order deflections
  - Blade-pitch actuator dynamics
  - GUI & animation capabilities
- Planned enhancements (for blades):
  - Interface to overhauled **AeroDyn** (rewrite **A2AD**)
  - Improve definition of elastic, inertia, & aerodynamic axes of blades with built-in curvature & sweep
- Future opportunities (for blades):
  - Replace rigid bodies with flex bodies (imported from FEA)
  - Utilize linearization in a rotating frame

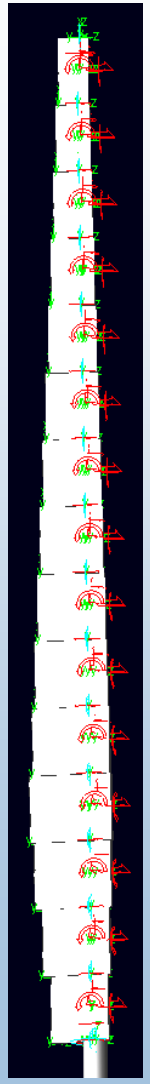

ADAMS Blade Generated by FAST

Conclusions

- Design tools & codes are critical to the design & analysis of blades & turbines
- Capabilities of NREL's codes include:
  - Airfoil data file processing (**AirfoilPrep**)
  - Rotor performance prediction (**WT_Perf**)
  - Section properties generation (**PreComp**)
  - Coupled modes calculation (**BModes**)
  - Aero-hydro-servo-elastic computations for loads & stability analysis (**FAST** / **ADAMS** with **AeroDyn**)
- Future work aimed at supporting the design & analysis of advanced blade & turbine concepts

HUSUM WindEnergy