Ridgetop Group, Inc.

Electronic Prognostics: Turning Data into Knowledge

Justin Judkins

Ridgetop Group, Inc.

- **Arizona-based firm, with focus on electronic/semiconductor fault modeling and tool development.**
- **Government customers include NAVSEA, NAVAIR, DARPA, DOE, Air Force, NASA, MDA.**
- **Expanded to Europe and Japan in 2004**
- **Foundation in fault to failure progression, Electronic Prognostics, and ePHM**

Ridgetop Group, Inc.

- Extensive engineering staff experience from Tektronix, Honeywell, IBM, ST Micro, Lucent, and Texas Instruments

- Working with Prognostics teams from University of Tennessee and HRL

Current Funded Projects

Prognostics

- Advanced Diagnostics for Aircraft Actuators
- Integrated Prognostics in Switch-mode Power Supplies
- Intermittent Electronic Fault Detection in BGA Packages
- Digital System Fault Detection/Isolation
- Allan Variance Detection in Crystal Oscillators

IC Related

- Silicon Test Structures
- Radiation Tolerant Electronics
- Mixed Signal Core Development
- Die-Level Process Monitors

Electronic Prognostics and Reliability

- All systems are subject to wear and eventual failure
- Bathtub curve defines the progression
- Electronic Prognostics attempts to detect a "Prognostic Trigger" prior to onset of End Of Life

→ **Real-time adjustment of operating conditions**

→ **Avoidance of untimely failures of systems in the field**

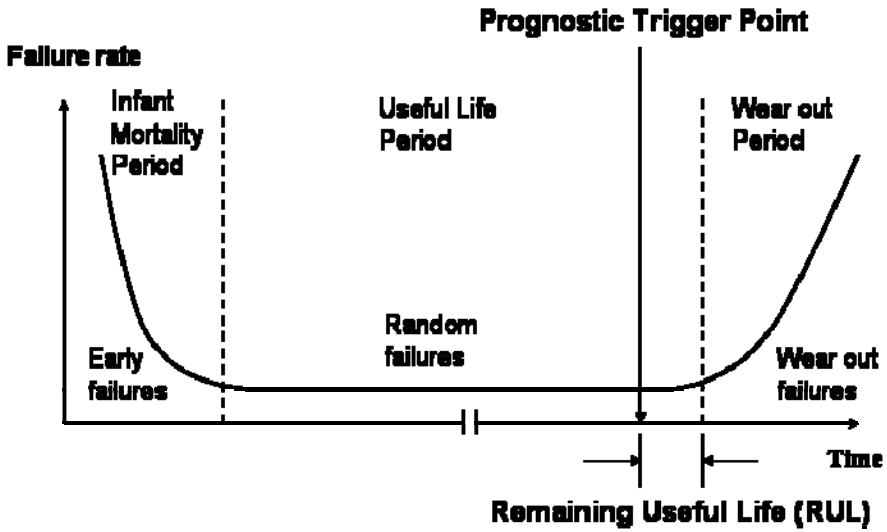

Hazards to Electronics

Environmental	temperature and humidity adversely effecting electronics
High Vibration Environment	can damage interconnects, cooling pumps, and disk drives
Software Aging	resource and memory allocation failures
Radiation Damage	single event and accumulated dose
Intermittent faults	due to NBTI, solder joint degradation, etc.
Other IC Effects	hot carrier, latch-up, TDDB
Degraded Power Supply	high noise, poor regulation

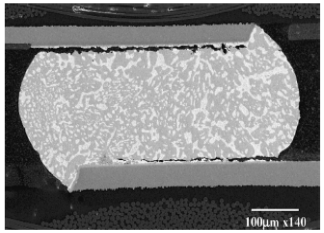

Solder joint crack

Failing capacitor

CPU Boards

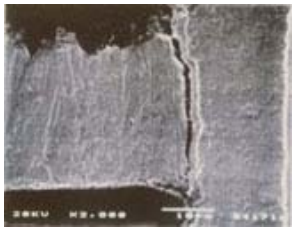

PCB line separation

Implementation of Advanced Diagnostics

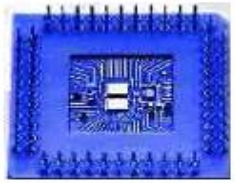

System Level

-Onboard monitors

-State-of-Health

-Remaining Useful Life (RUL)

-Communicate with Ground-based systems (Sentinel PHMPro™)

Module Level

-CNI Prognostics

-Digital Boards

-Power/Analog Boards

-Connectors

Board level

-IC, capacitors

-FPGA/CPU

-Solder Joint Intermittencies

Component Level

-Aging degradation

-Radiation damage

-Intermittencies

Die Level

-Process-related

-NBTI Aging effect Intermittencies

Supply Chain Logistics

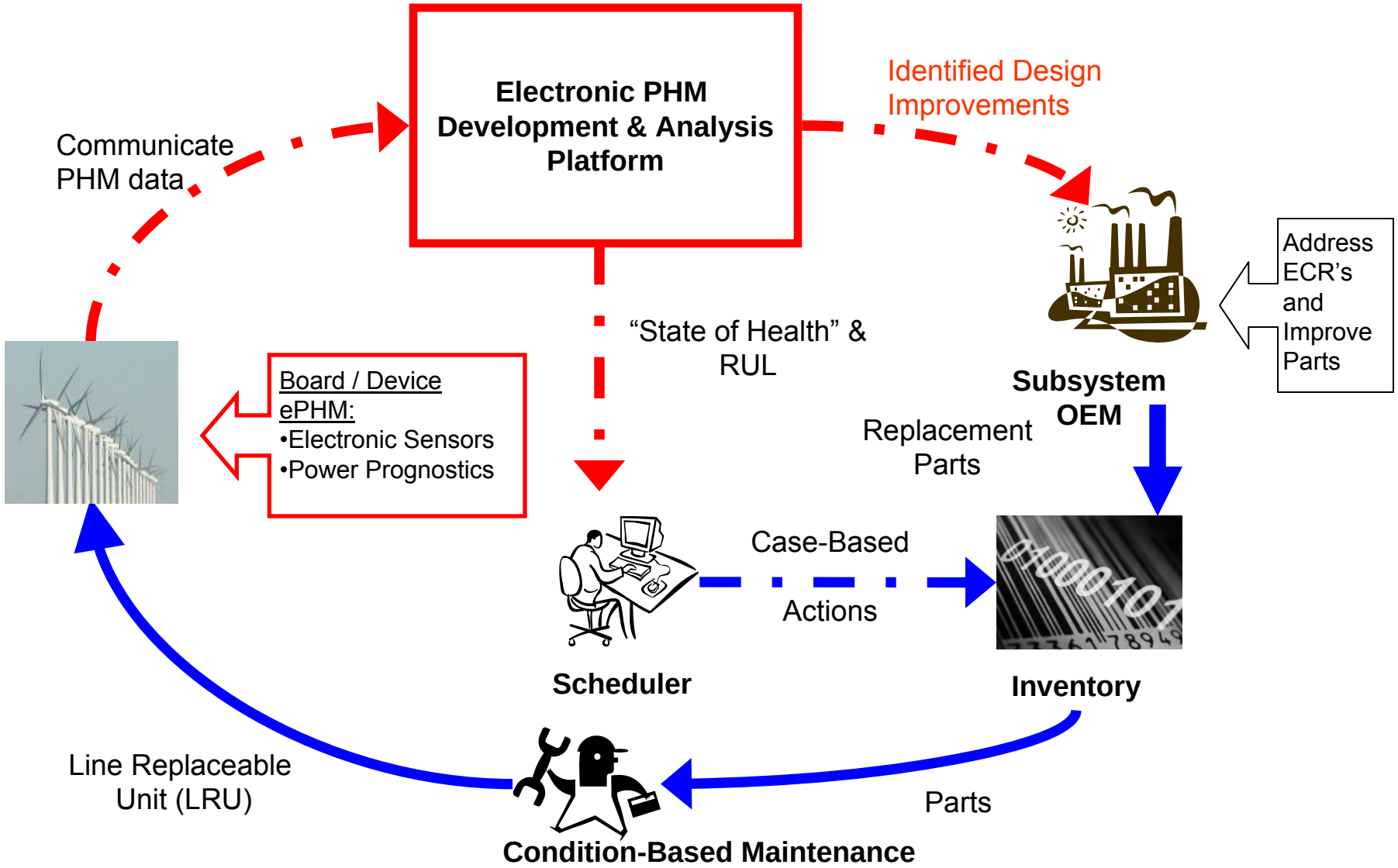

PHM Software Architecture

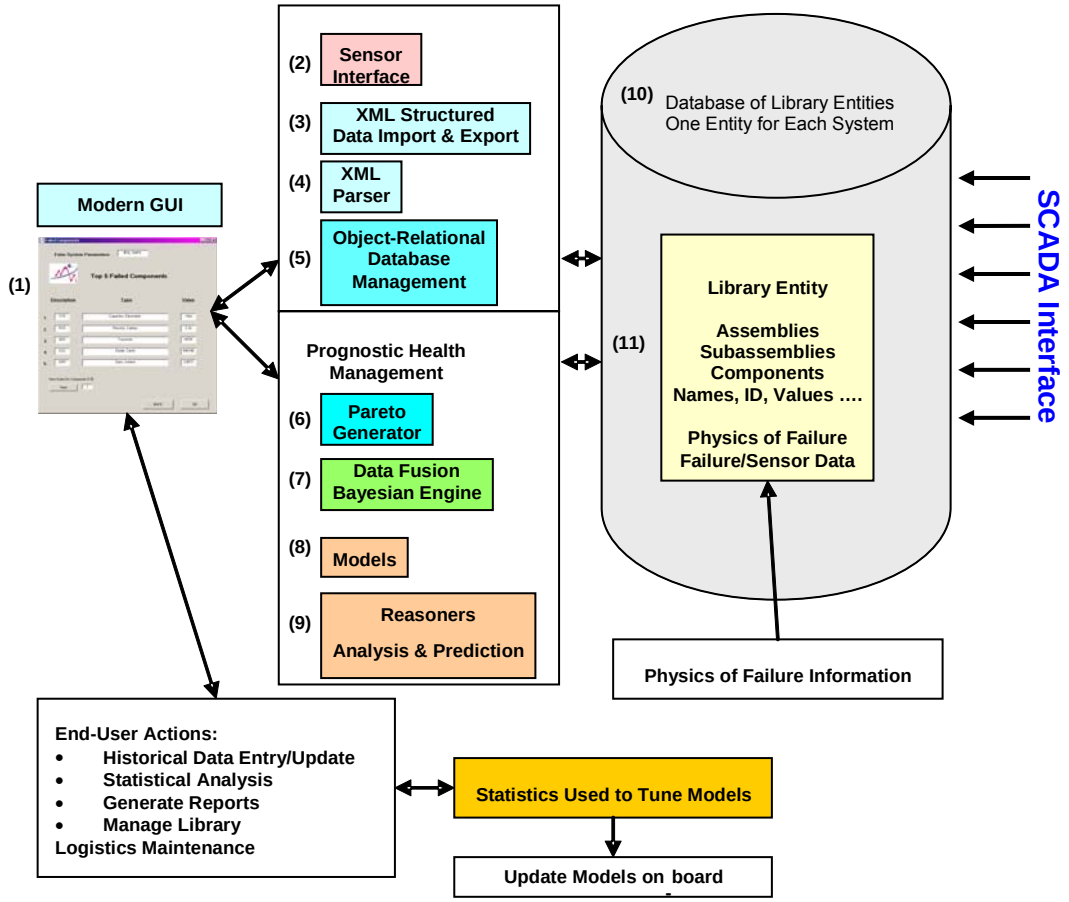

Enhanced Prognostics turns data into knowledge

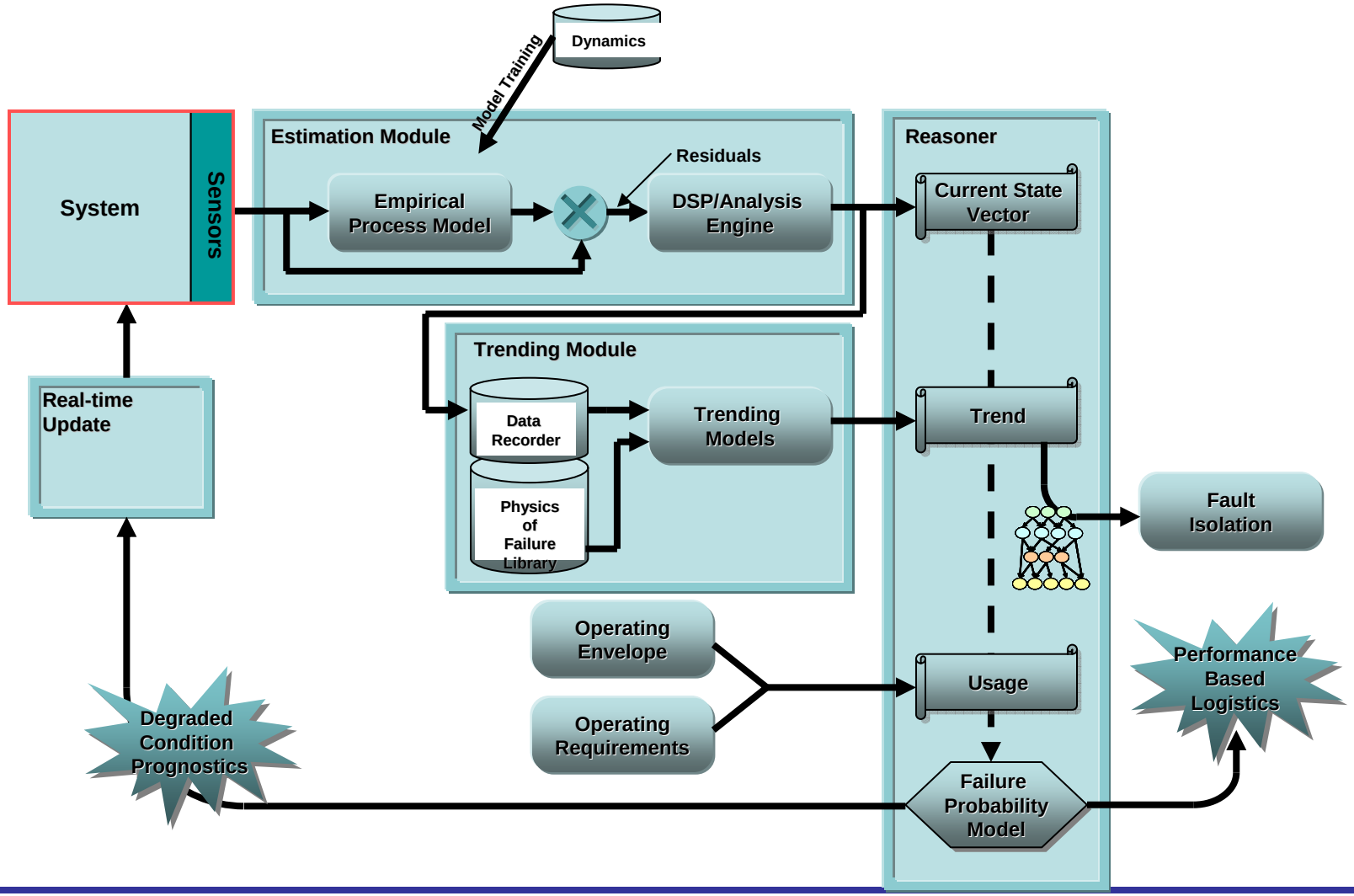

Estimation Methods for Electronics Prognostics

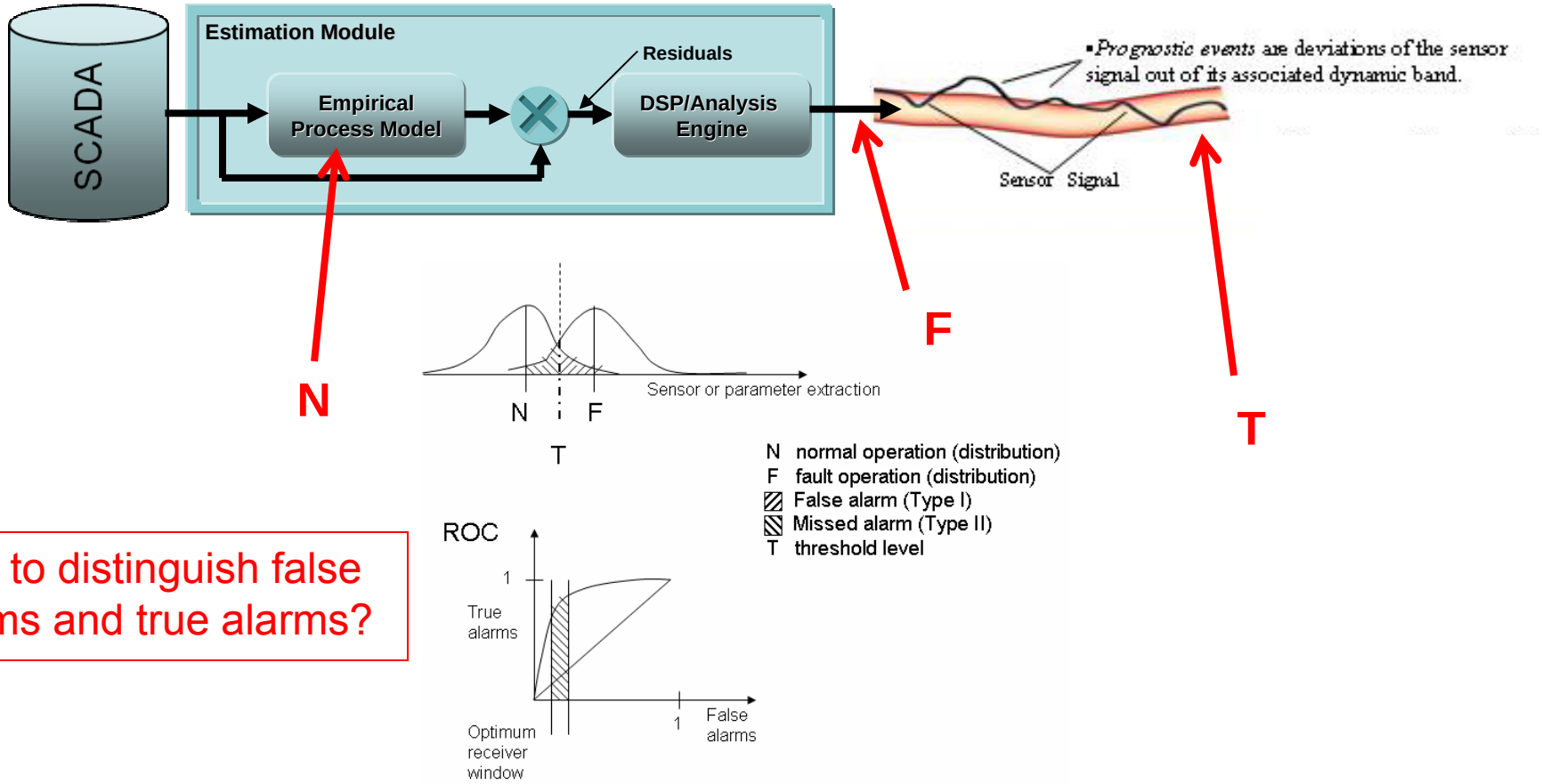

How to distinguish false alarms and true alarms?

Bayesian Network Reasoner

Domain Knowledge and Data

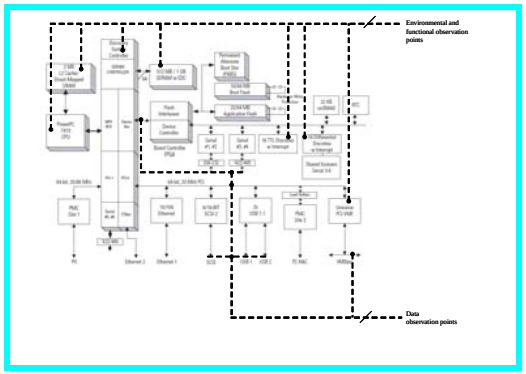

Statistical Models

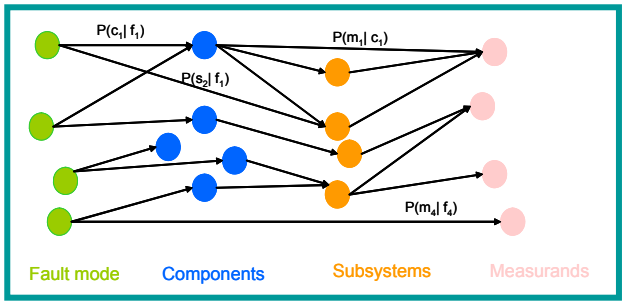

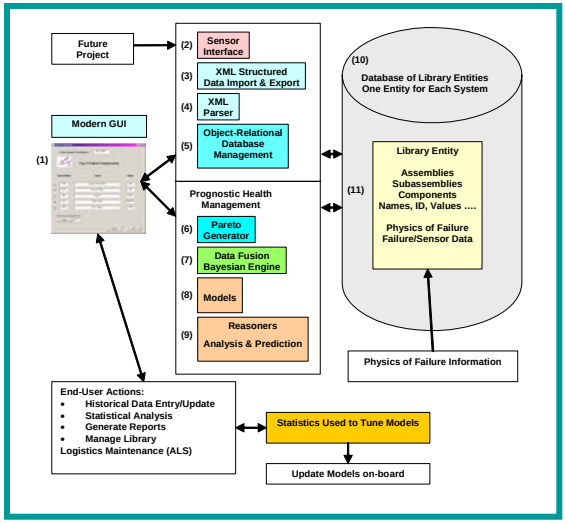

Analyst

Query

Decision

Diagnosis/Prognosis Support System

Example: Switch-Mode Power Supply

Converter Stage

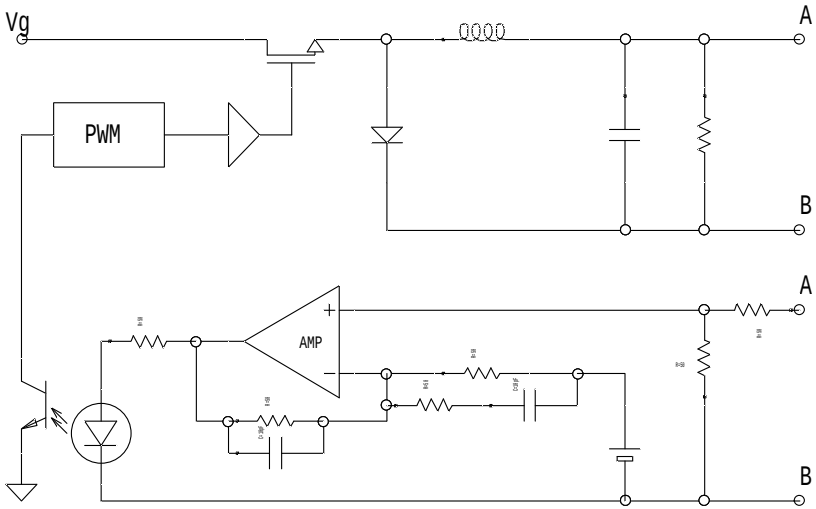

Voltage Output

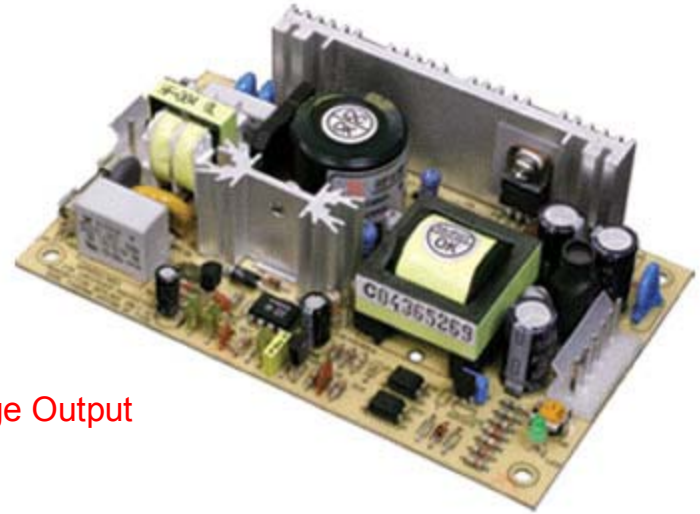

Voltage Measured

Feedback Stage

State Diagram – Regulated Power Supply

Loop Gain:

$$T(s) = G(s)H(s)$$

Transfer Function:

$$V(s) = -I(s)\frac{Z_{out}}{1+T(s)}$$

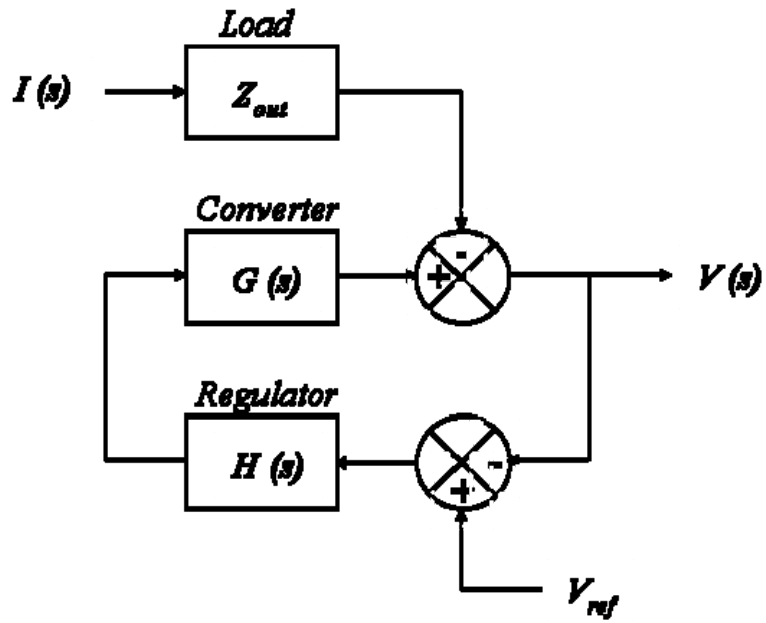

Converter Transfer Function (Voltage-mode Feedback)

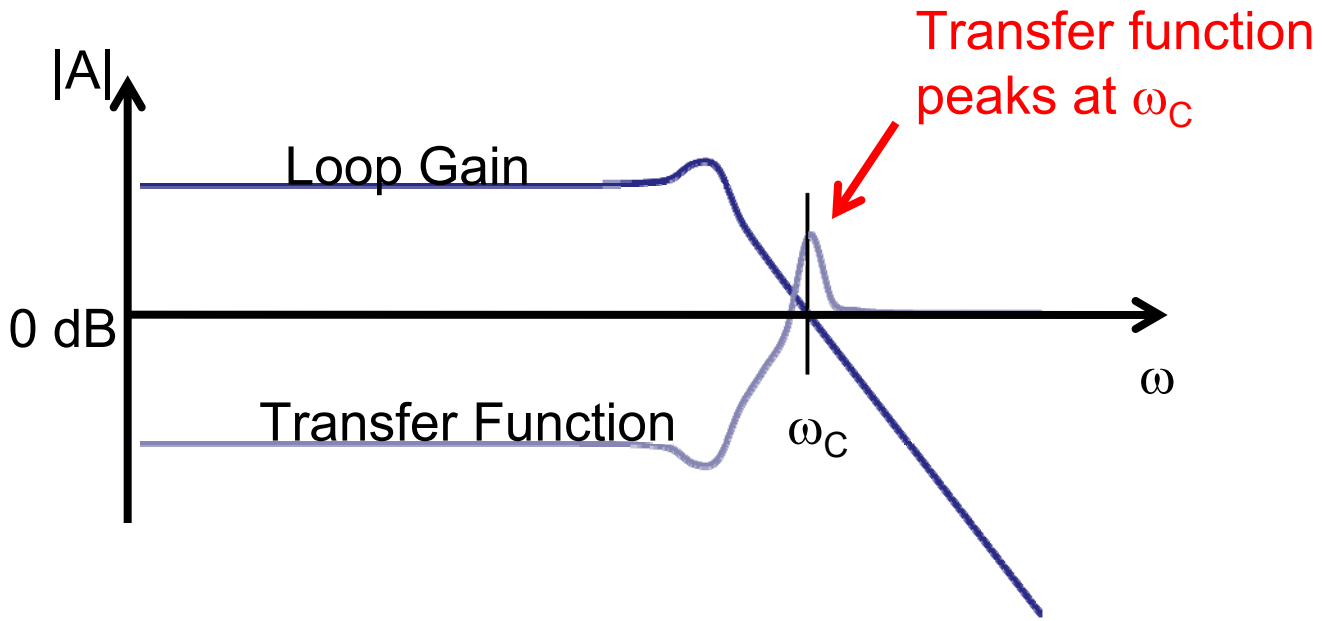

Opto-Isolator Degradation

HALT Result

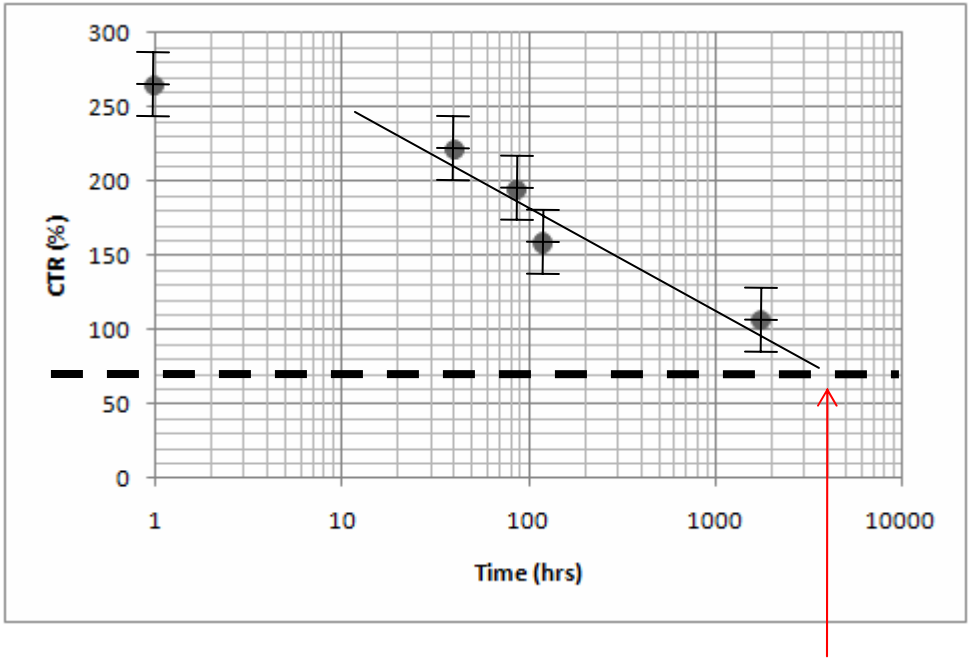

Minimum Operating Threshold

Predicted End-of-Life

Stress Conditions:

50 mA Forward current

CTR Measured at 3mA

Capacitor Ripple Voltage

HALT Result

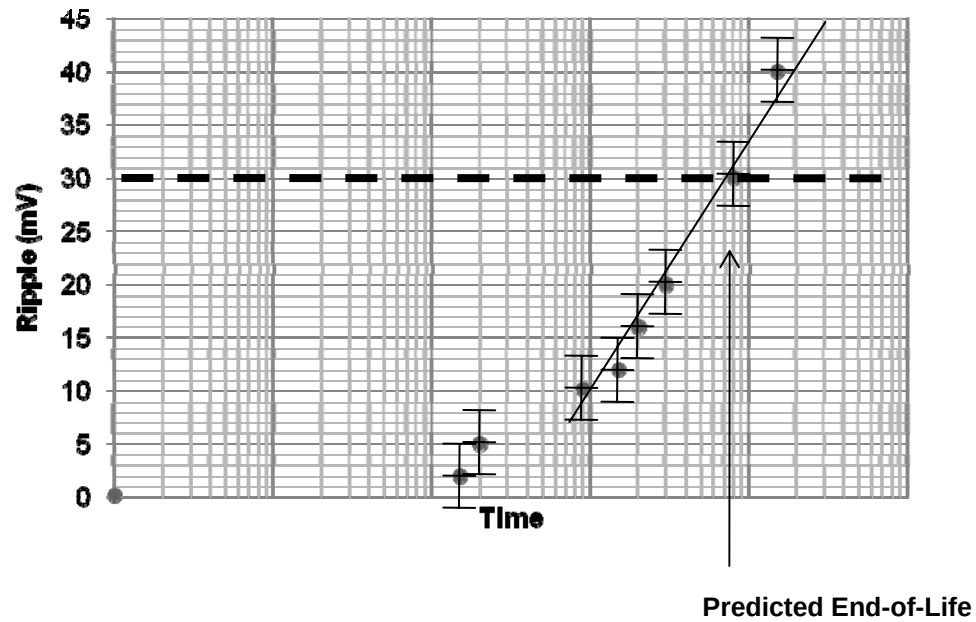

Stress Conditions:

40 Volts DC

3 Amps AC Ripple

Loop Gain $T(s)$ Changes

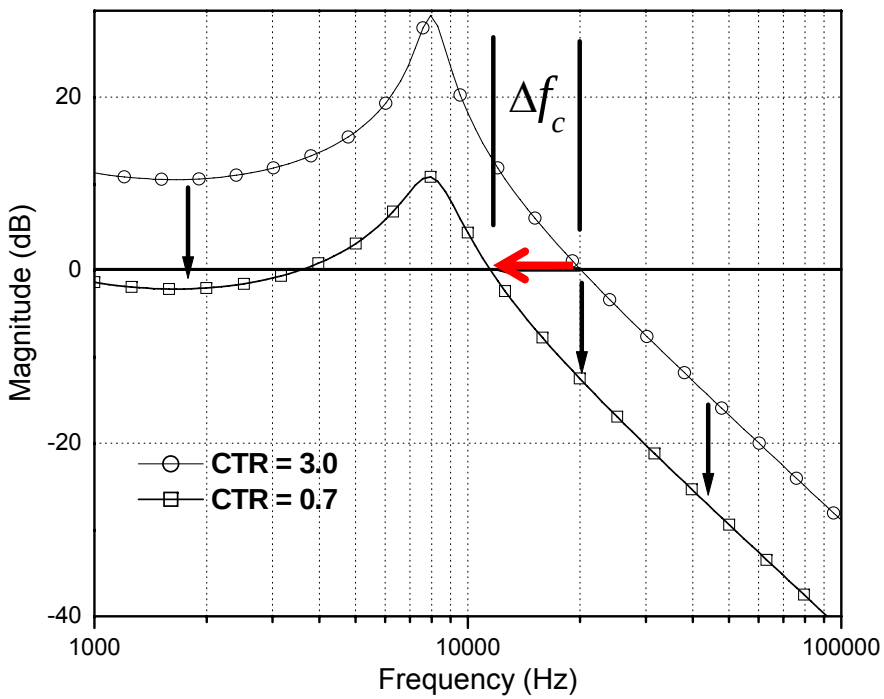

Left-shift in Crossover Frequency f_c

Tank Circuit has
-40 dB/Decade Roll-off

$$\frac{f_0 - \Delta f}{f_0} \cong \sqrt{\frac{Gain_{Deg}}{Gain_0}}$$

Converter Impulse response

$$\frac{f_0 - \Delta f}{f_0} \cong \sqrt{\frac{Gain_{Deg}}{Gain_0}}$$

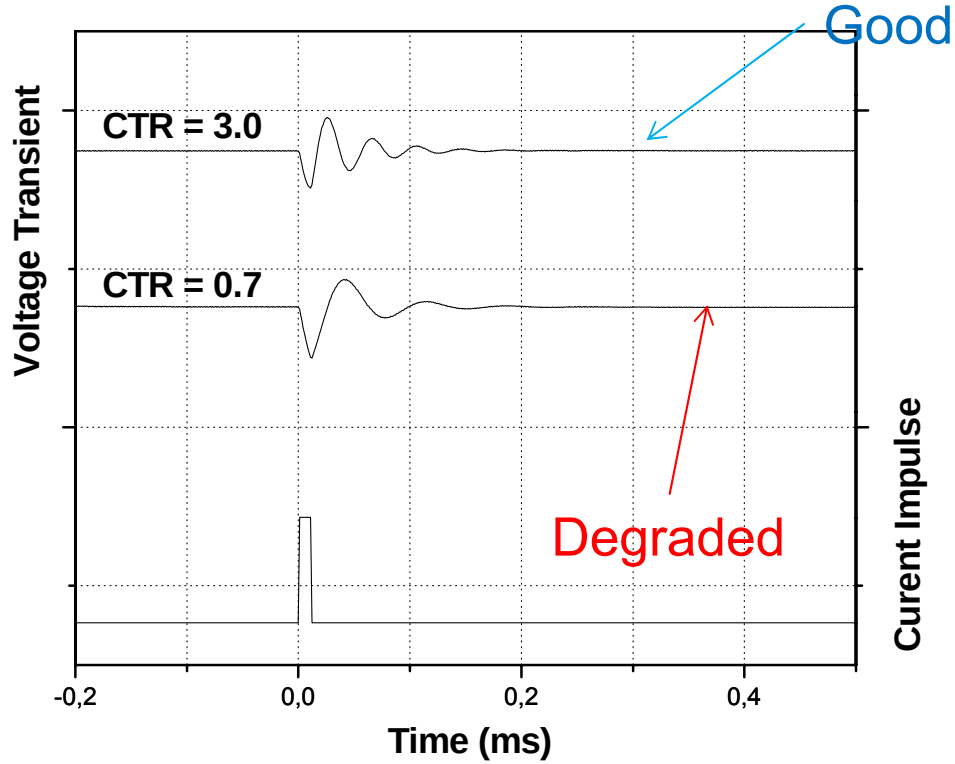

Oscilloscope Traces for Two Cases

"New"

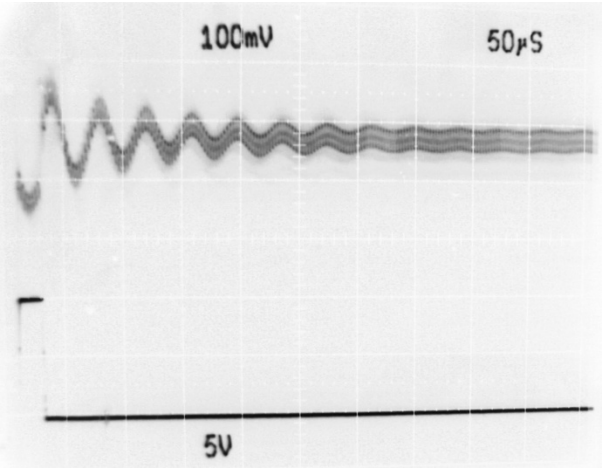

Voltage Waveform

Current Waveform

"Degraded"

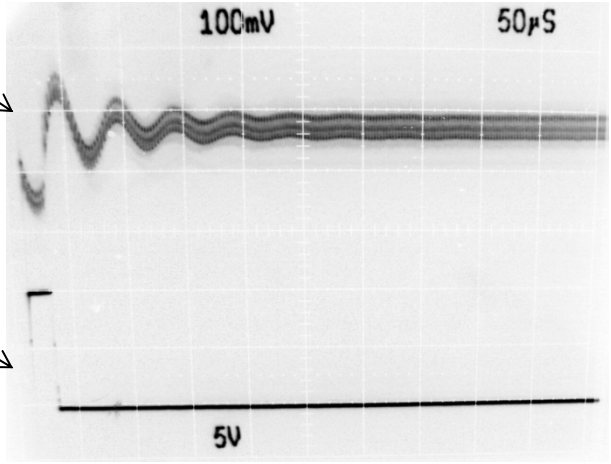

(a) Opto-Isolator with CTR = 300%

(b) Opto-Isolator with CTR = 70%

But, the signal is small compared to measurement noise …

Problem:

- For a well designed supply, the response voltage is on the order of the ripple voltage
- FFT is limited by sampling, inefficient
- Peak detection won't work

Solution:

- Derive the impulse response $\vartheta = f(\omega, A, Q, \omega_c)$
- Define a merit function $M.F. = \frac{1}{N}\sum(\vartheta - y_i)^2$
- Minimize the merit function with simple non-linear parameter search

Caution:

- Not guaranteed to result in global minimum

Signature Pattern Recognition

- **CPCI Power Supply with healthy optical isolator CTR = 265%**
- **Current pulse of 5 A and 15 μsec duration**
- **Sampled with 20 ksps 12 bit ADC**
- **Extracted frequency is <u>26.1 kHz</u>**

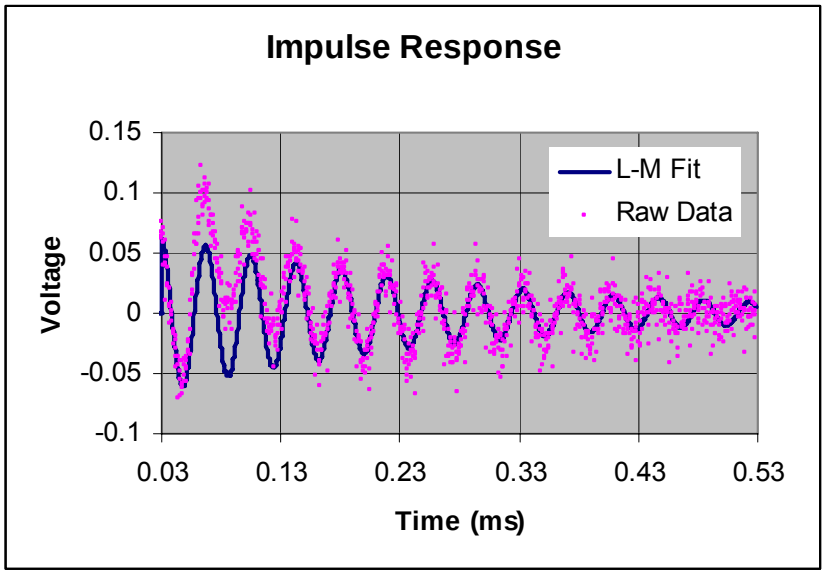

Sensor Collection for Prognostics in DC-DC Converter

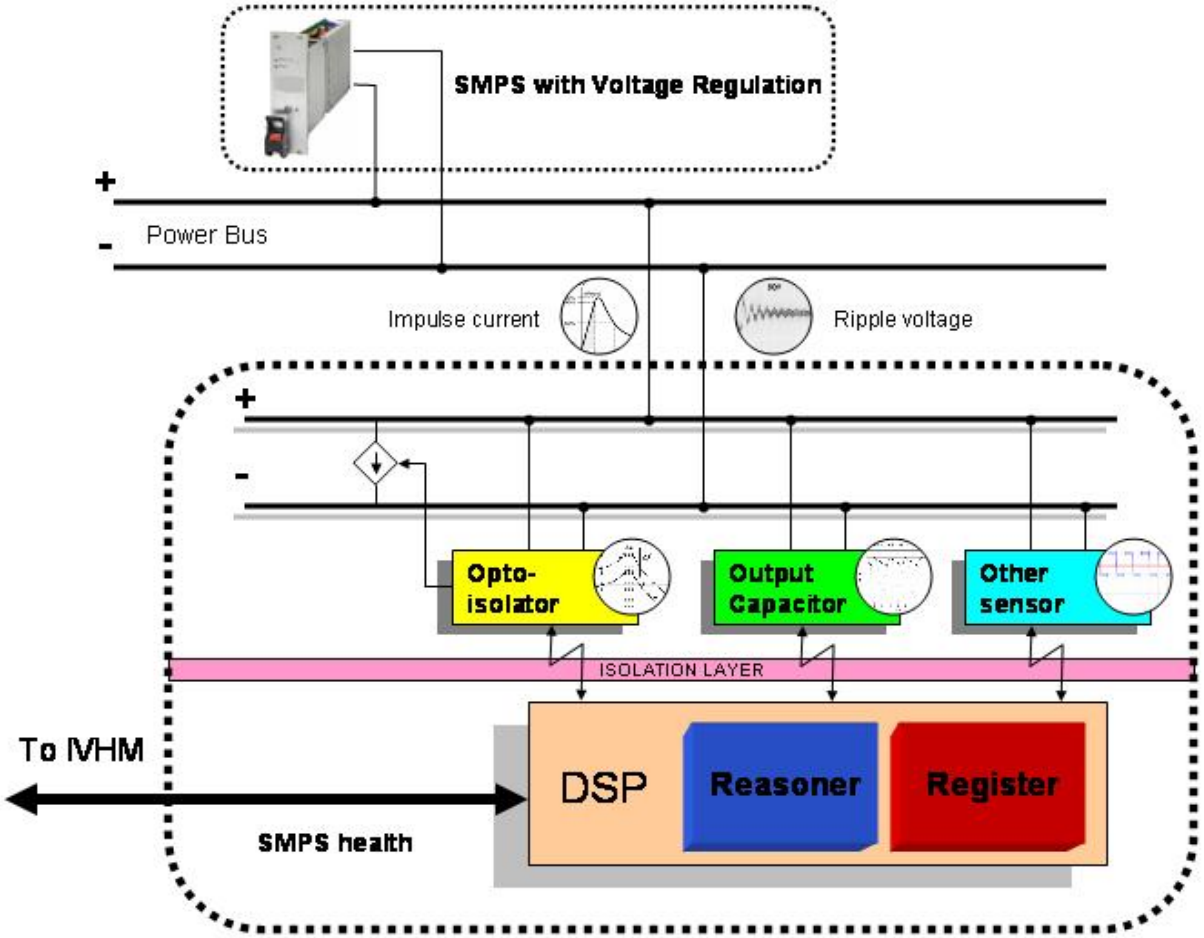

Example: Actuator System

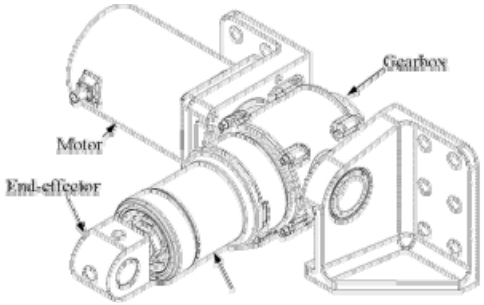

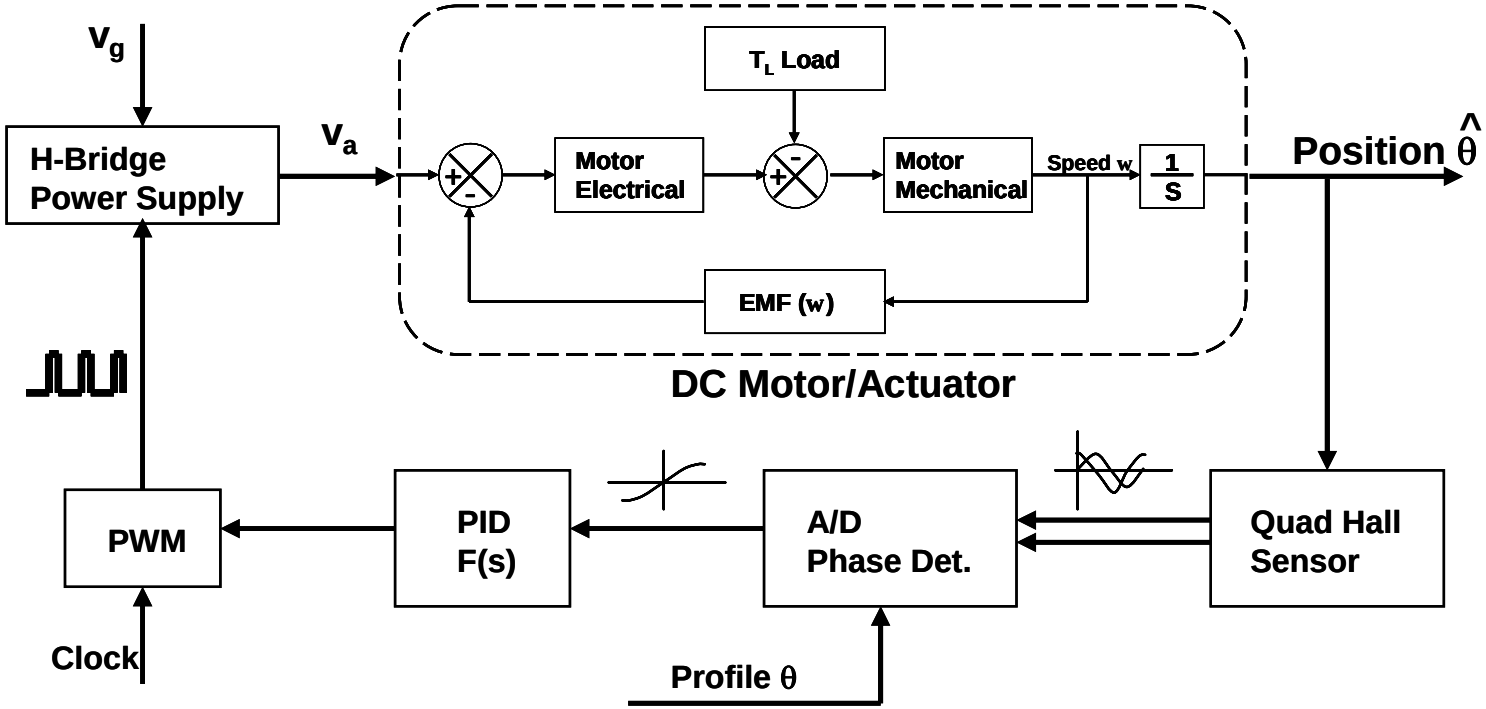

State Diagram

Actuator Ring-down Signature

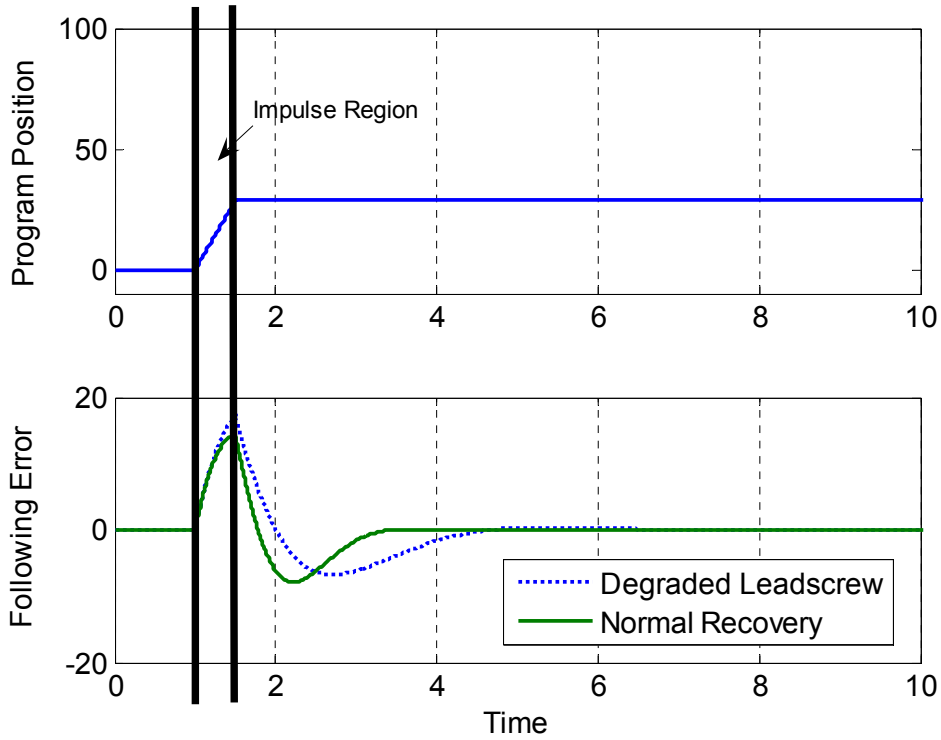

Example: Electrical Signature Analysis[1]

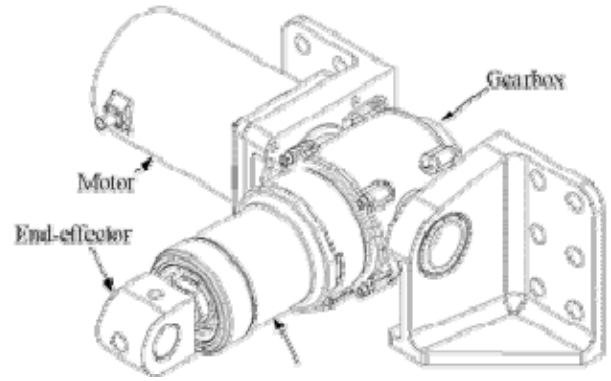

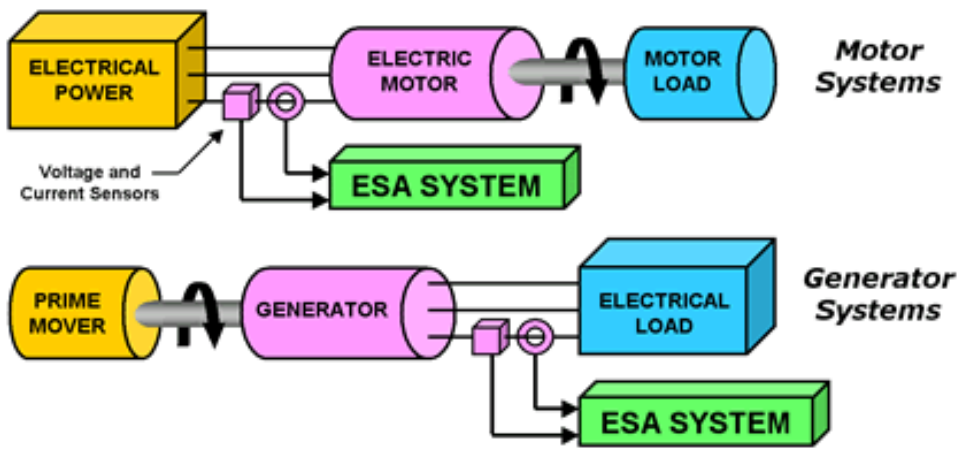

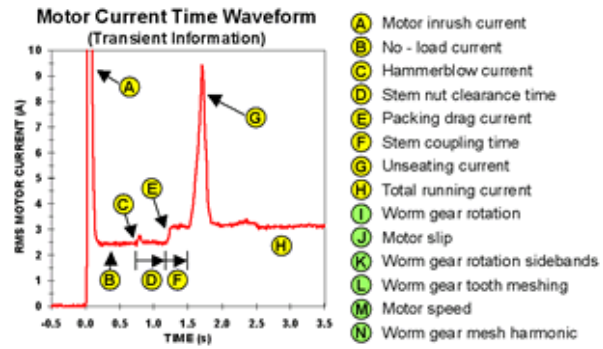

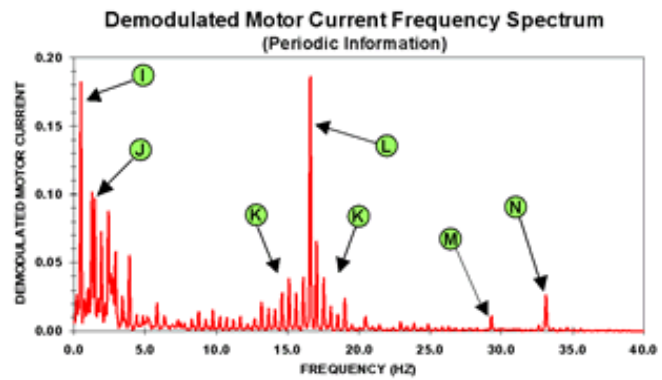

[1] Haynes et al., Motor Current Signature Analysis Method for Diagnosing Motor Operated Devices, United States Patent Number 4,965,513.

Reasoner Framework

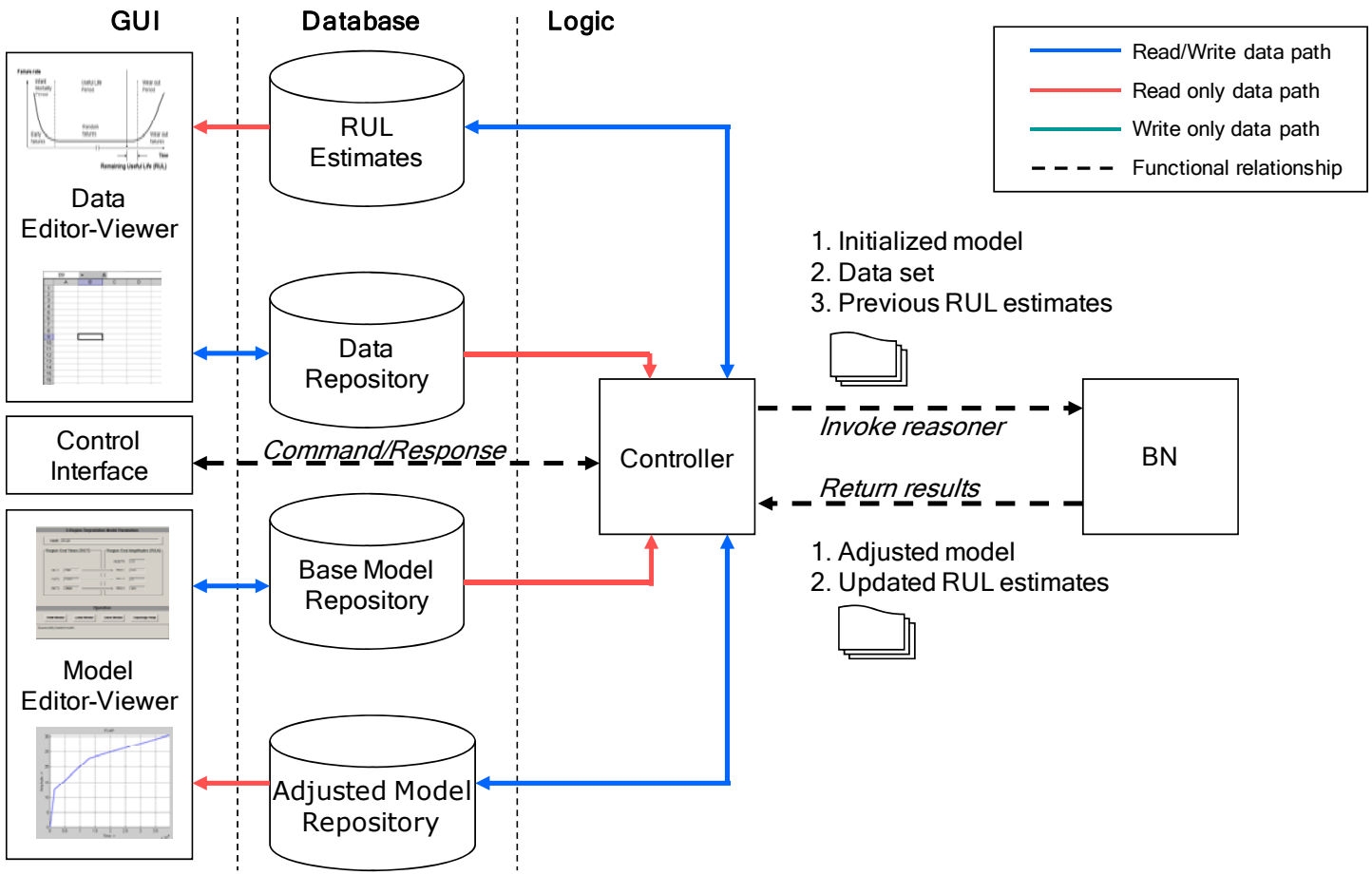

Discussion