Accelerated Life Testing of Generator Insulation Systems

Bill Erdman

BEW Engineering

10/03/06

Specifying Generators for Wind Turbine Applications

- **Open vs. Totally Enclosed**
  - Water to Air
  - Air to Air
  - Other
- **Form Wound vs. Random Wound**
  - Random Wound Stator, Preformed Rotor
- **Insulated/Non-Insulated/Ground Brush**
- **Fault Torques – Gearbox Loads**
- **Efficiency 94 - 95% vs. 96.5 – 97.5%**
- **Wind a Unique Application – Environment and Thermal Fatigue Cycles**

Generator Questions for the Industry

Should the Wind Industry Deal More Formally with the Lack of Uniformity in Generator Supply.

Would the Wind Energy Industry Benefit from a Generator Version of AGMA 6006??

Insulation Materials Standards

- IEEE Standard No. 1 – *Recommended Practices for Temperature Limits in the Rating of Electrical Equipment and for the Evaluation of Electrical Insulations*
- IEC Publication No. 60085 – *Thermal Evaluation and Classification of Electrical Insulation*
- *Significant Harmony Between the Two Standards, but not Complete Harmony*

Related IEEE Standards

- #117 Standard Test Procedure for the Evaluation of Systems of Insulating Materials for Random Wound AC Electric Machinery
- *#275 Recommended Practice for Thermal Evaluation of Insulation Systems for Alternating Current Electric Machinery Employing Form Wound Pre-Insulated Stator Coils Rated 6900 V and Below*
- #304 Standard Test Procedure for Evaluation and Classification of Insulation Systems for Direct-Current Machines
- #429 Recommended Practice for Thermal Evaluation of Sealed Insulation Systems for AC Electric Machinery Employing Form Wound Coils Pre-Insulated Stator Coils for Machinery Rated 6900V and Below
- #1107 Recommended Practice for Thermal Evaluation of Sealed Insulation Systems for AC Electric Machinery Employing Random Wound Coils
- *#1043-1996 IEEE Recommended Practice for Voltage Endurance Testing of Form Wound Bars and Coils*

IEEE 275 – Accelerated Aging Test for Thermal Degradation

- 1992 Rewrite of 1981 Recommended Practice (Materials/Rotating Equipment Committee of PES)
- Construction of quantity of “Formettes”
- Thermal Cycles
- Mechanical Stress Cycles
- Humidity Cycles
- Overvoltage Cycles
- Ohmic Measurement

IEEE 275 Test Specimen

3er. ANGULO DE PROYECCION
3er. PROJECTION ANGLE

SI TIENE DUDA PREGUNTE
IF IN DOUBT, ASK

DWG. No. PM11984

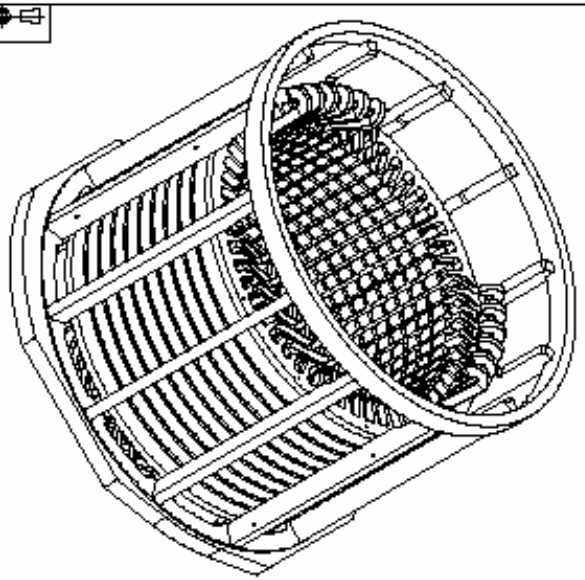

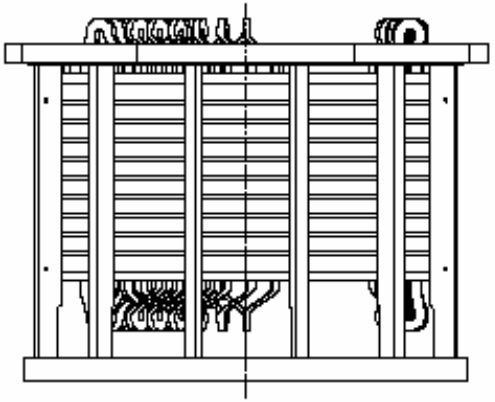

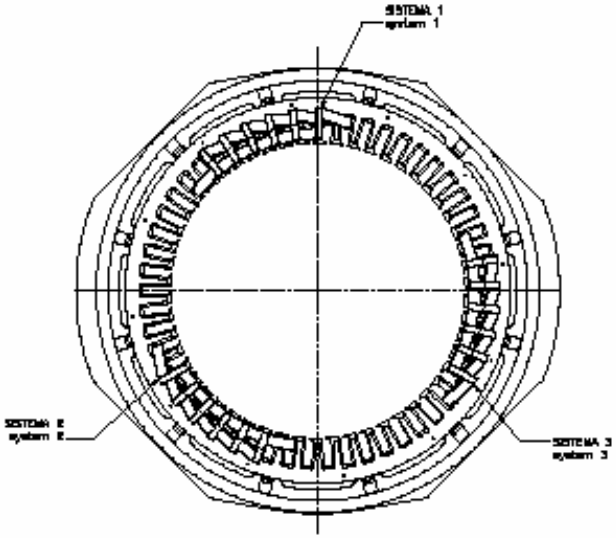

SISTEMA system	CANT. QTY.	PARTES RECTAS straight length	CABEZALES curtains	PUNTAS leads	PUENTES jumpers	SEPARADORES separators	CUNAS wedges	RANURA slot
1	4	1 VUELTA A 1/2 TRASLAPE CON CINTA SK3 1 turn half lap with SK3 tape	1 VUELTA A 1/2 TRASLAPE CON CINTA SK3 + 1 VUELTA A 1/2 TRASLAPE CINTA TERLENO 1 turn half lap with SK3 tape + 1 turn half lap with terylene tape	2 VUELTAS A 1/2 TRASLAPE CON CINTA SK3 + 1 VUELTA A 1/2 TRASLAPE CINTA TERLENO 2 turn half lap with SK3 tape + 1 turn half lap with terylene tape	2 VUELTAS A 1/2 TRASLAPE CON CINTA SK3 + 1 VUELTA A 1/2 TRASLAPE CINTA TERLENO 2 turn half lap with SK3 tape + 1 turn half lap with terylene tape	PLASTICO DE 1/16" ESP. X 18.3" LONG. plastic of 1/16" thick. X 18.3" length	CU1 DE 0.056" ESP. X 17.8" LONG. + MAGNAVAL DE 0.118" ESP. X 18.0" LONG. CU1 0.056" thick. X 17.8" length + magnaval 0.118" thick. X 18.0" length	1 HOJA DE ISONOM 0.015" ESP. X 17.8" LONG. 1 sheet of ISONOM 0.015" thick. X 17.8" length
2	8	N/A	1 VUELTA A 1/2 TRASLAPE CON CINTA SK3 + 1 VUELTA A 1/2 TRASLAPE CINTA TERLENO 1 turn half lap with SK3 tape + 1 turn half lap with terylene tape	1 VUELTA A 1/2 TRASLAPE CON CINTA SK3 + 1 VUELTA A 1/2 TRASLAPE CINTA TERLENO 1 turn half lap with SK3 tape + 1 turn half lap with terylene tape	2 VUELTA A 1/2 TRASLAPE CON CINTA SK3 + 1 VUELTA A 1/2 TRASLAPE CINTA TERLENO 2 turn half lap with SK3 tape + 1 turn half lap with terylene tape	PLASTICO DE 1/16" ESP. X 18.3" LONG. plastick of 1/16" thick. X 18.3" length	CU1 DE 0.056" ESP. X 17.8" LONG. + MAGNAVAL DE 0.118" ESP. X 18.0" LONG. CU1 0.056" thick. X 17.8" length + magnaval 0.118" thick. X 18.0" length	2 HOJAS DE ISONOM 0.015" ESP. X 17.8" LONG. 2 sheets of ISONOM 0.015" thick. X 17.8" length
3	8	N/A	1 VUELTA A 1/2 TRASLAPE CON CINTA TERLENO 1 turn half lap with terylene tape	1 VUELTA A 1/2 TRASLAPE CON CINTA SK3 + 1 VUELTA A 1/2 TRASLAPE CINTA TERLENO 1 turn half lap with SK3 tape + 1 turn half lap with terylene tape	2 VUELTA A 1/2 TRASLAPE CON CINTA SK3 + 1 VUELTA A 1/2 TRASLAPE CINTA TERLENO 2 turns half lap with SK3 tape + 1 turn half lap with terylene tape	PLASTICO DE 1/16" ESP. X 20.7" LONG. plastick of 1/16" thick. X 20.7" length	CU1 DE 0.056" ESP. X 17.8" LONG. + MAGNAVAL DE 0.118" ESP. X 18.0" LONG. CU1 0.056" thick. X 17.8" length + magnaval 0.118" thick. X 18.0" length	2 HOJAS DE ISONOM 0.015" ESP. X 17.8" LONG. 2 sheets of ISONOM 0.015" thick. X 17.8" length

REV.	FECHA/date			MODIFICACION/modification	APROBO approved

ESCALA/scale 1:1

AV. 400 DE MARZO
No. 200 ETAPALAPA D.F. MEXICO

ESPECIFICACION/specification

DIBUJO/drawn: M. MATA M. | FECHA/date 9-10-09
REVISO/checked: E. GARCIA | ESCALA/scale 1/32 - 1
APROBO: approved | ACOT./dimensions: PULG./inches
HOJA/sheet 1 DE/of 1

TITULO/title:
MEDIDAS DE AISLAMIENTO
645 KV, 1EP, PLUS.
INSULATION STUDIES

DWG. No. PM11984

IEEE 275 Test Regime

Test #1	Duration
Temperature Chamber Test at 170 Deg. C	28 days
I hour shaker test at 170 Hz. (orthogonal to slots)	1 day
95 - 100% humidity exposure	2 days
Voltage Tests (inter - turn, turn - turn, turn - ground)	1/2 day
Trial Test Duration	31.5 days
Likely # of Cycles	10
Total Test Duration	315 days

Test #2	Duration
Temperature Chamber Test at 190 Deg. C	7 days
I hour shaker test at 170 Hz. (orthogonal to slots)	1 day
95 - 100% humidity exposure	2 days
Voltage Tests (inter-turn, turn-turn, turn-ground)	1/2 day
Trial Test Duration	10.5 days
Likely # of Cycles	10
Total Test Duration	105 days

Test #3	Duration
Temperature Chamber Test at 210 Deg. C	2 days
I hour shaker test at 170 Hz. (orthogonal to slots)	1 day
95 - 100% humidity exposure	2 days
Voltage Tests (inter - turn, turn - turn, turn - ground)	1/2 day
Trial Test Duration	5.5 days
Likely # of Cycles	10
Total Test Duration	55 days

Notes:

1 The tests could be performed with all insulations systems in parallel to reduce total time - assumes we can get large chambers.

2 Temperature cycles should be +/- 2 deg. C.

3 Temperatures selecte based on 40 deg. C ambient 105 deg. C rise. - Not on insulation system rating of 180 deg. C.

4 Shaker tests are one hour in duration, but require set up time.

5 Voltage tests are 1kV inter turn, 3 kV turn-turn and turn to ground.

6 Three insulation systems are being proposed for testing:
a system being used in the field today - baseline
b - description
c - description

7 Attmept to use full stator rather than formettes

IEEE 1043 Voltage Endurance Test

- Utilizes full length form wound coil.
- Test subjects specimens to temperature, high voltage looking for minimum time to failure
- Failure defined as % reduction of ground insulation within a given time period.
- Tests typically run from 250 to 400 hours.
- Multiple specimens used.

Advances In Power Semiconductors

- IGBT Technology

  Sub- Micron Geometries Enabling Trench Gate Designs to 1700 V

- Advances in Packaging

  Al Si C Base Plate Matches Ceramic TC Better than Copper

  Medium Voltage Systems for Large Turbines6500 V/600 Amp Device available for 1 year now

Integrated Gate Controlled Thyristor (IGCT)

- Available over the Last 5 Years
- Non –Isolated Hockey Puk Package allows Two Sided Cooling
- Monolithic Silicon – Can be fused protected
- 91 MM Device rated at 6.5 kV and 2000 Amps
- Headed for 10kV

The End